REVISION				
REV	DESCRIPTION	DRAWN	APPR	DATE
IR	Initial Registration	I.C.KIM	I.C.KIM	2013. 04. 03.

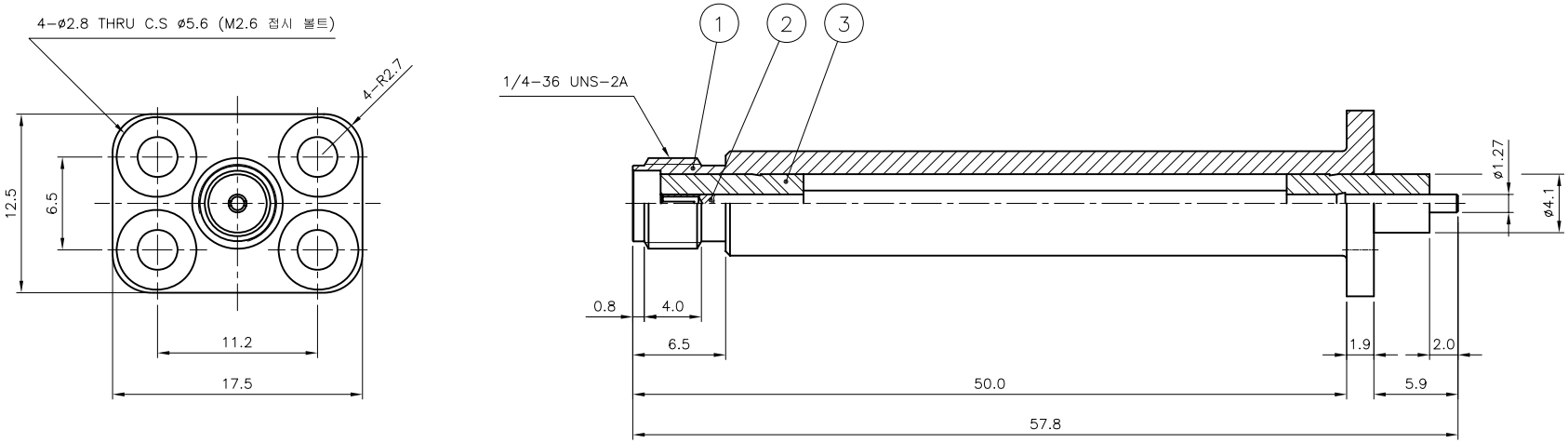

NO.	DESCRIPTION	Q'TY	MATERIAL	PLATING	CODE
3	INSULATOR	2	TEFLON		DIN01014-N/1
2	CONTACT	1	BeCu	Gold Plate	DCT02804-5/1
1	BODY	1	MBsBD	Nickel Plate	DBD03296-5/1

TOLERANCE	Decimal ±0.1	DATE	2013. 04. 03.
	Angle ±1°	APPROVED BY	I.C.KIM
MATERIAL		CHECKED BY	E.H.KIM
		DRAWN BY	I.C.KIM
FINISH		SCALE 3/1	UNIT mm

KJ COMTECH
KJ COMTECH CO.,LTD.
RF & MICROWAVE TECHNOLOGY
Tel : 82-32-347-8015
Fax : 82-32-347-8017

TITLE: SMA50 SOLDER END JS-4H

A3 | DWG NO. CN02966-7/1 | REVISION I R | SHEET 1 of 1