REVISION				
REV	DESCRIPTION	DRAWN	APPR	DATE
IR	Initial Registration	E.H.KIM	I.C.KIM	2013.09.25.

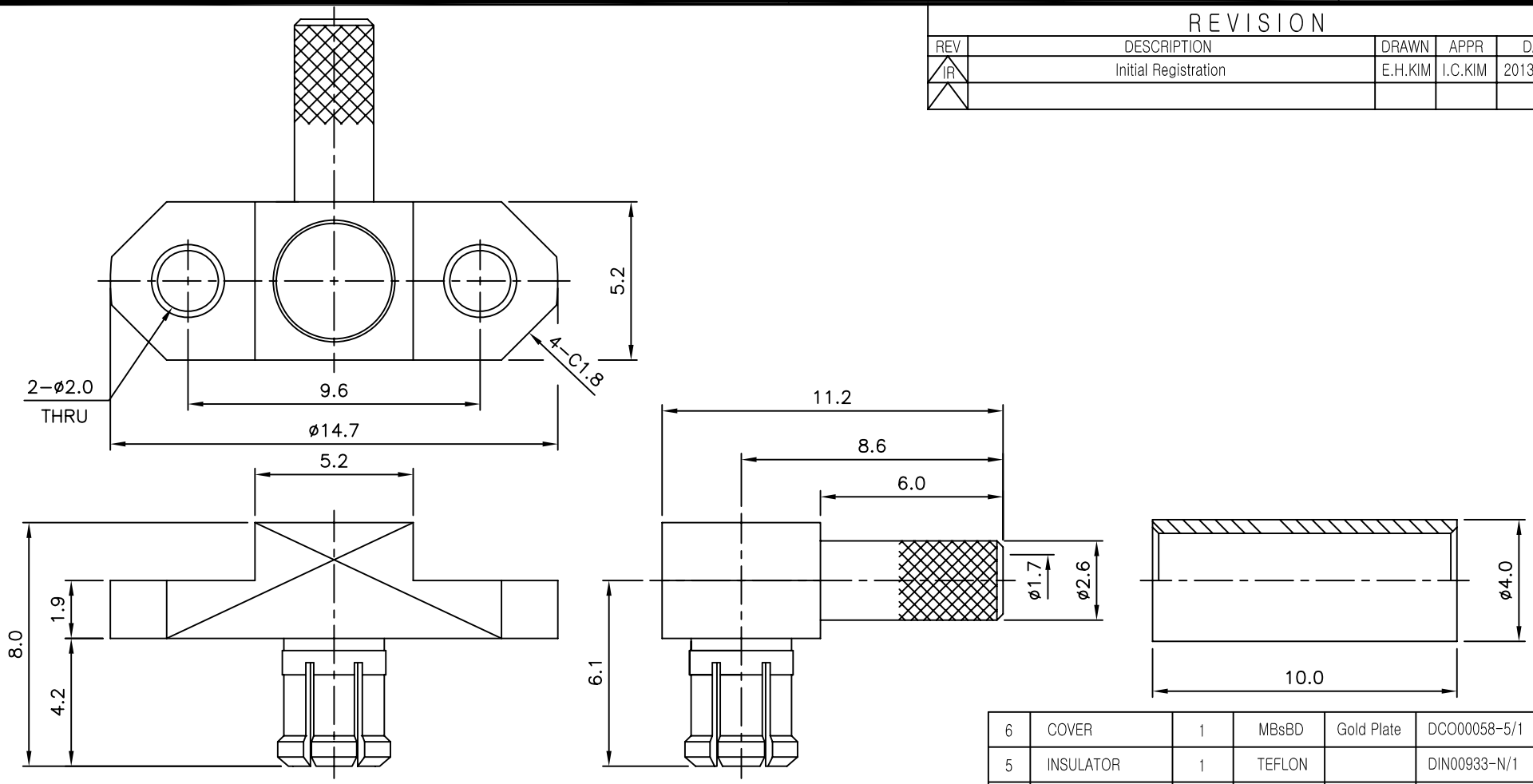

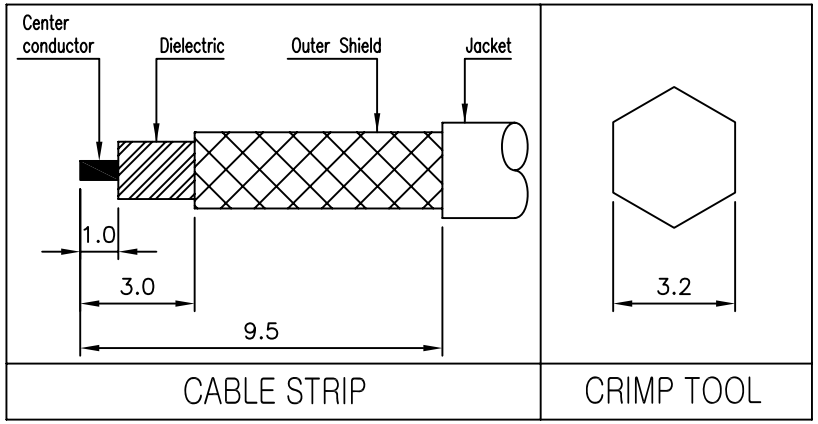

NO.		DESCRIPTION	Q'TY	MATERIAL	PLATING	CODE	
6		COVER	1	MBsBD	Gold Plate	DCO00058-5/1	
5		INSULATOR	1	TEFLON		DIN00933-N/1	
4		INSULATOR	1	TEFLON		DIN02120-N/1	
3		FERRULE	1	MBsBD	Nickel Plate	DFE00034-5/1	
2		CONTACT	1	MBsBD	Gold Plate	DCT02738-5/1	
1	1-2	JACK	1	BeCu	Gold Plate	DBB00332-5/1	DJA00006-4/3
	1-1	BODY	1	MBsBD			DBD03237-3/1

TOLERANCE	Decimal ±0.1	DATE	2013. 09. 25.
	Angle ±1°	APPROVED BY	I.C.KIM
		CHECKED BY	
MATERIAL		DRAWN BY	E.H.KIM
FINISH		SCALE 5/1	UNIT mm

KJ COMTECH
KJ COMTECH CO.,LTD.
RF & MICROWAVE TECHNOLOGY
Tel : 82-32-347-8015
Fax : 82-32-347-8017

TITLE
MCX50 CABLE PL-2H RG316

A4 | DWG NO. CN02917-7/1 | REVISION I R | SHEET 1 of 1