REVISION

REV	DESCRIPTION	DRAWN	APPR	DATE
IR	Initial Registration	E.H.KIM	I.C.KIM	2013.09.25.
1	[설변No.201401-0012]업체요청사항(BODY 형상 변경)	M.H.SONG	I.C.KIM	2014.01.20.
2	[설변No.201403-0001]업체요청사항(BODY 외경부 "R" 추가)	M.H.SONG	I.C.KIM	2014.03.06.

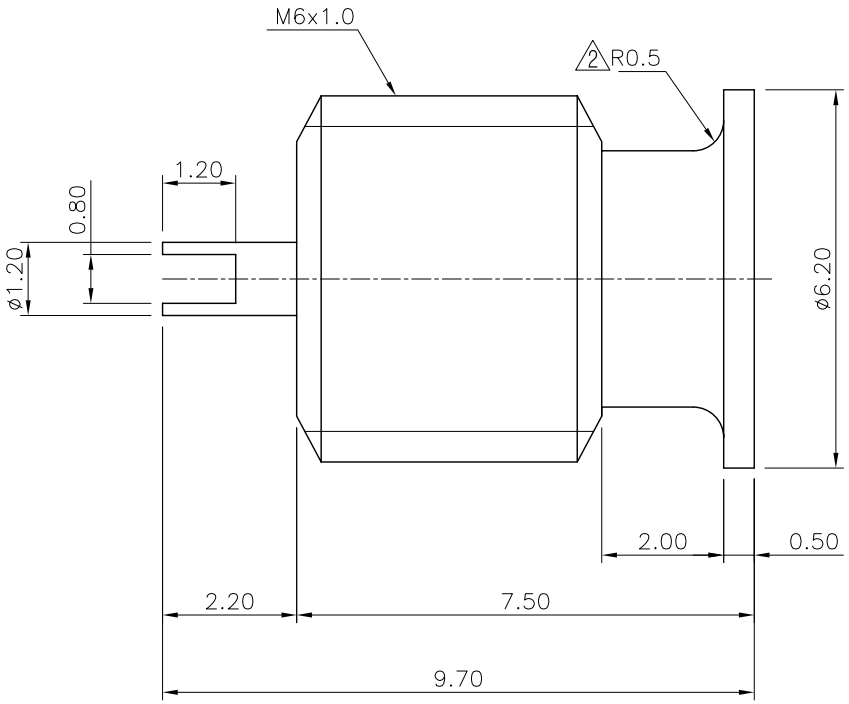

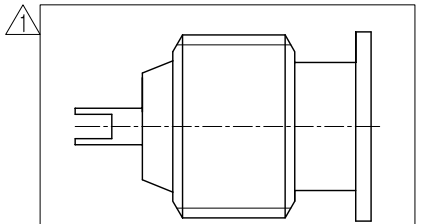

1 변경 전 형상

NO.	DESCRIPTION	Q'TY	MATERIAL	PLATING	CODE
3	INSULATOR	1	TEFLON		DIN02119-N/1
2	CONTACT	1	BeCu	Gold Plate	DCT02737-5/1
1	BODY	1	MBsBD	Gold Plate	DBD03433-5/1

2 1

TOLERANCE	Decimal ±0.1	DATE	2014. 03. 06.
	Angle ±1°	APPROVED BY	I.C.KIM
		CHECKED BY	E.H.KIM
MATERIAL		DRAWN BY	M.H.SONG
FINISH		SCALE 8/1	UNIT mm

KJ COMTECH
KJ COMTECH CO.,LTD.
RF & MICROWAVE TECHNOLOGY
Tel : 82-32-347-8015
Fax : 82-32-347-8017

TITLE
MCX50 SOLDER END JB (F/F)

A4 | DWG NO. CN02916-7/2 | REVISION 2 | SHEET 1 of 1