REVISION				
REV	DESCRIPTION	DRAWN	APPR	DATE
I R	Initial Registration	I.C.KIM	I.C.KIM	2012.12.07.

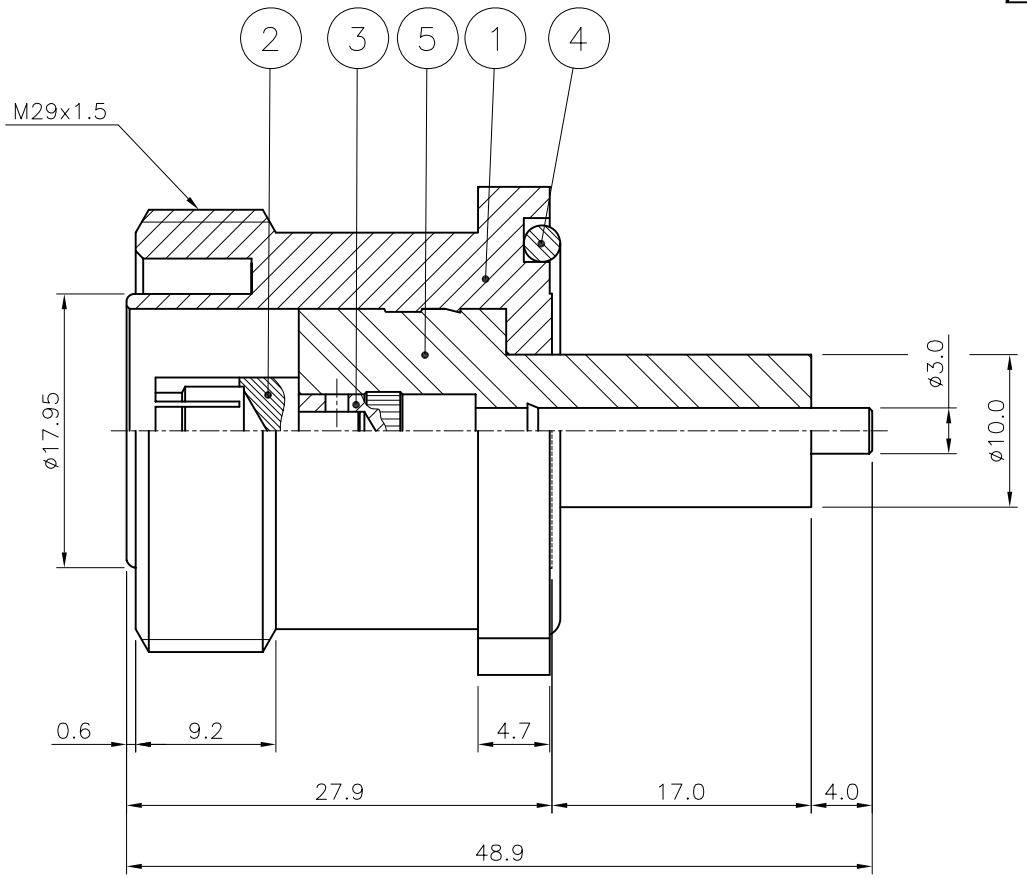

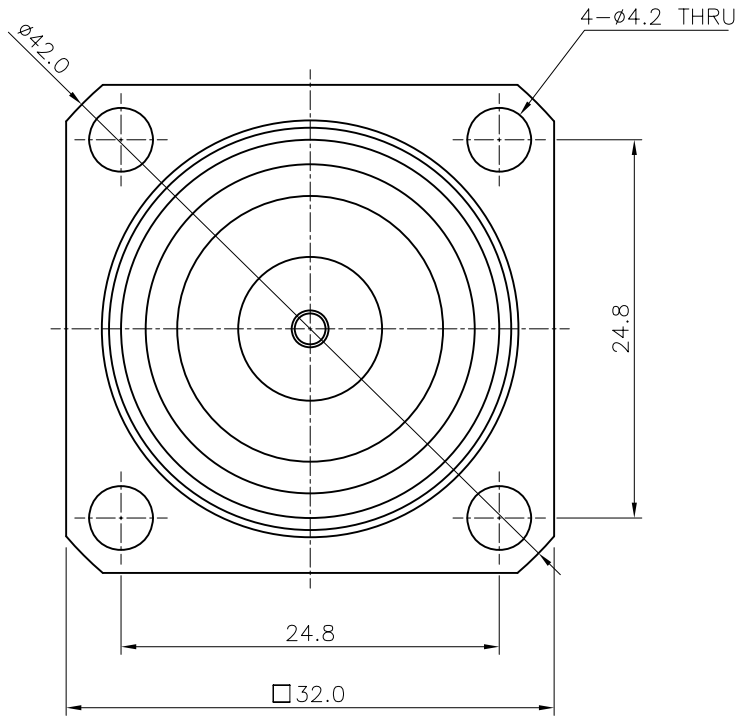

NO.	DESCRIPTION	Q'TY	MATERIAL	PLATING	CODE
5	INSULATOR	1	TEFLON		DIN02110-N/1
4	GASKET	1	SILICONE RUB		DGK00199-N/1
3	CONTACT	1	MBsBD	Silver Plate 3μm	DCT02720-5/1
2	CONTACT	1	BeCu	Silver Plate 7μm	DCT01473-5/1
1	BODY	1	MBsBD	SUCO Plate (3μm)	DBD03212-5/1

TOLERANCE	Decimal ±0.2	DATE	2012. 12. 07.
	Angle ±1°	APPROVED BY	I. C. KIM
		CHECKED BY	E. H. KIM
MATERIAL	-	DRAWN BY	I. C. KIM
FINISH	-	SCALE 2/1	UNIT mm

KJ COMTECH
KJ COMTECH CO.,LTD.
RF & MICROWAVE TECHNOLOGY
Tel : 82-32-347-8015
Fax : 82-32-347-8017

TITLE
7/16 DIN50 SOLDER END JS-4H

A4

DWG NO. CN02902-7/1

REVISION I R

SHEET 1 of 1