REVISION				
REV	DESCRIPTION	DRAWN	APPR	DATE
IR	Initial Registration	E.H.KIM	I.C.KIM	2012.11.27.
1	[설변No.202201-0009] PIPE 압착 후 BURR 발생 개선으로 인한 PIPE 변경	S.Y.EUN	S.H.KIM	2022.01.18.

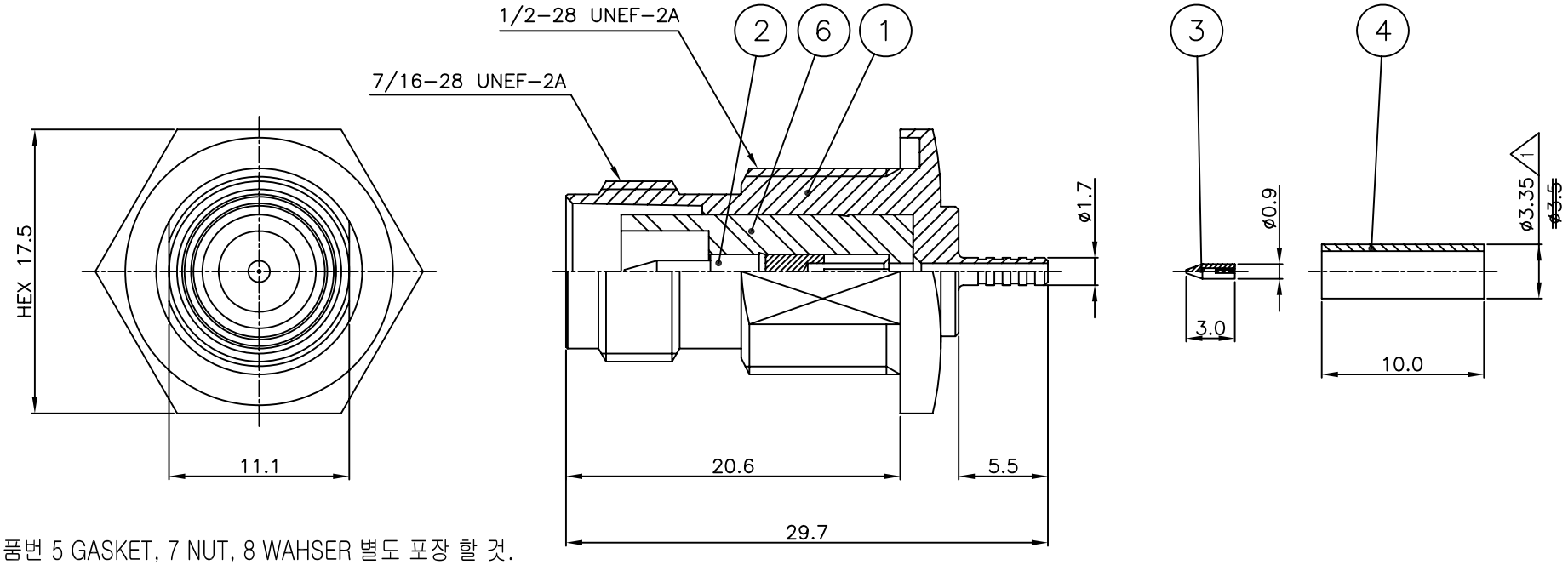

※ 품번 5 GASKET, 7 NUT, 8 WAHSER 별도 포장 할 것.

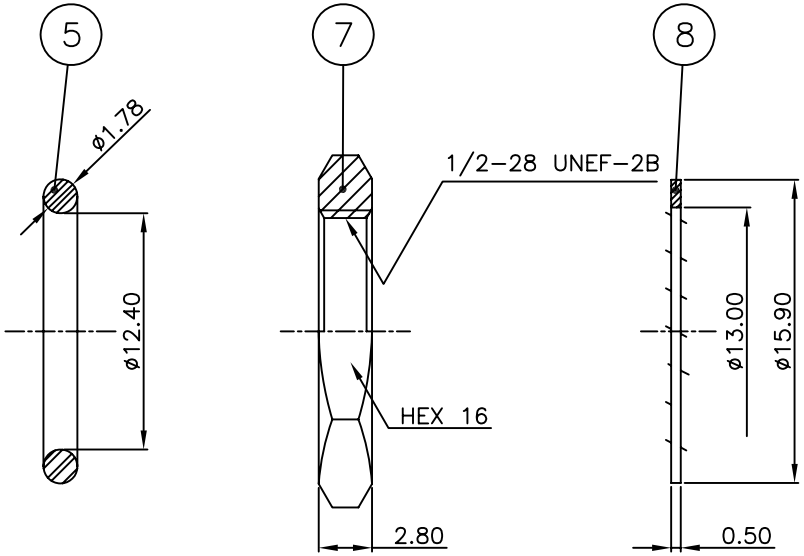

NO.	DESCRIPTION	Q'TY	MATERIAL	PLATING	CODE
8	WASHER	1	MBsBD	Nickel Plate	DWA00022-5/1
7	NUT	1	MBsBD	Nickel Plate	DNT00020-5/1
6	INSULATOR	1	TEFLON		DIN02100-N/1
5	GASKET	1	SILICONE RUB	Red	DGK00036-N/1
1 4	FERRULE	1	MBsBD	Nickel Plate	DFE00018-5/2 ~~DFE00010-5/2~~
3	CONTACT	1	MBsBD	Gold Plate	DCT00982-5/1
2	CONTACT	1	BeCu	Gold Plate	DCT02710-5/1
1	BODY	1	MBsBD	Nickel Plate	DBD03207-5/1

TOLERANCE	Decimal ±0.1	DATE	2022. 01. 18.
	Angle ±1°	APPROVED BY	S.H.KIM
		CHECKED BY	
MATERIAL		DRAWN BY	S.Y.EUN
FINISH		SCALE 2.5/1	UNIT mm

KJ COMTECH
KJ COMTECH CO.,LTD.
RF & MICROWAVE TECHNOLOGY
Tel : 82-32-347-8015
Fax : 82-32-347-8017

TITLE
TNC50 CABLE JB (F/N) Reverse RG178

A4 DWG NO. CN02899-7/1
REVISION 1 SHEET 1 of 1