REVISION		
REV	DESCRIPTION	DATE
IR	Initial Registration	2012. 11. 05

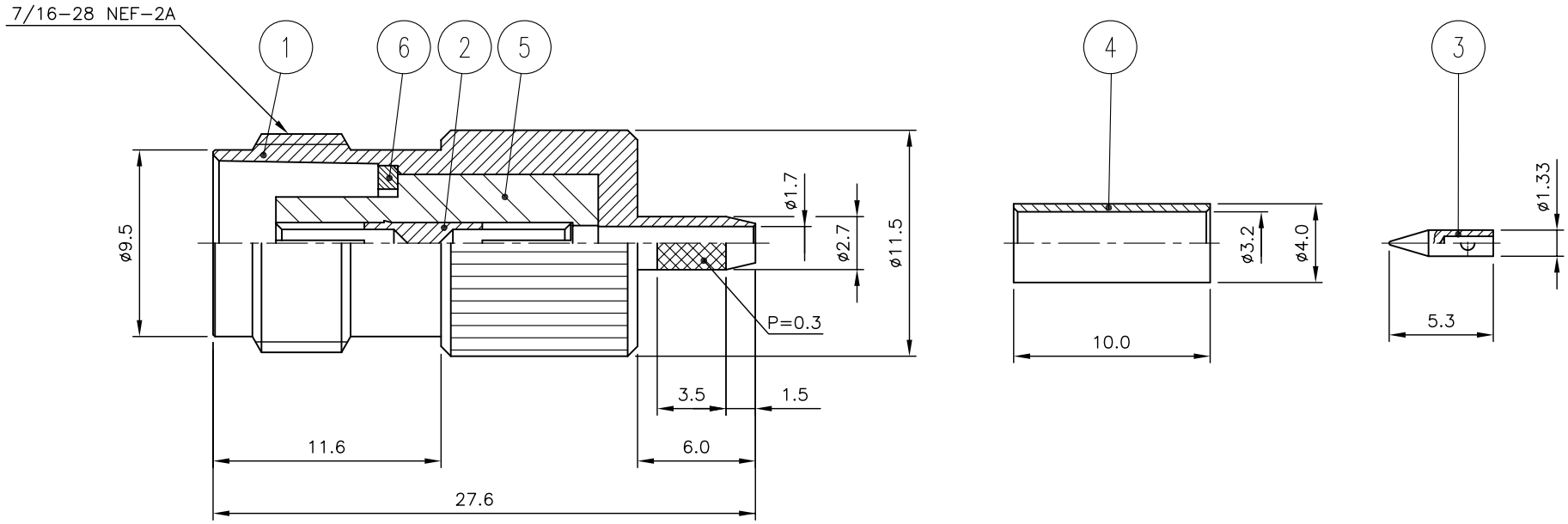

*조립시 주의 사항

-절연체+PIN 조립시 PIN이 절연체 안으로 깊게 조립되지 않도록 주의 할 것.

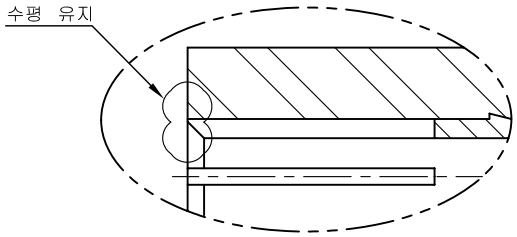

NO.	DESCRIPTION	Q'TY	MATERIAL	PLATING	CODE
6	RING	1	BRASS	Nickel Plated	DSR00051-5/1 (L7009)
5	INSULATOR	1	PTFE		DIN01772-N/1
4	FERRULE	1	BRASS	Nickel Plated	DFE00034-5/1 (F3010)
3	CONTACT	1	BRASS	Gold Plated	DCT00462-5/1 (E6017)
2	CONTACT	1	Beryllium copper	Gold Plated	DCT02268-5/1
1	BODY	1	BRASS	Nickel Plated	DBD00717-5/2

TOLERANCE	Decimal ±0.1	DATE	2012. 11. 05.
	Angle ±1°	APPROVED BY	I.C.KIM
		CHECKED BY	
MATERIAL	———	DRAWN BY	E.H.KIM
FINISH	———	SCALE 3/1	UNIT mm

KJ COMTECH
KJ COMTECH CO.,LTD.
RF & MICROWAVE TECHNOLOGY
Tel : 82-32-347-8015
Fax : 82-32-347-8017

TITLE
TNC50 CABLE JS RG316S

A4 | DWG NO. CN02885-7/1 | REVISION A | SHEET 1 of 1