REVISION				
REV	DESCRIPTION	DRAWN	APPR	DATE
IR	Initial Registration	I.C.KIM		2017.03.13.

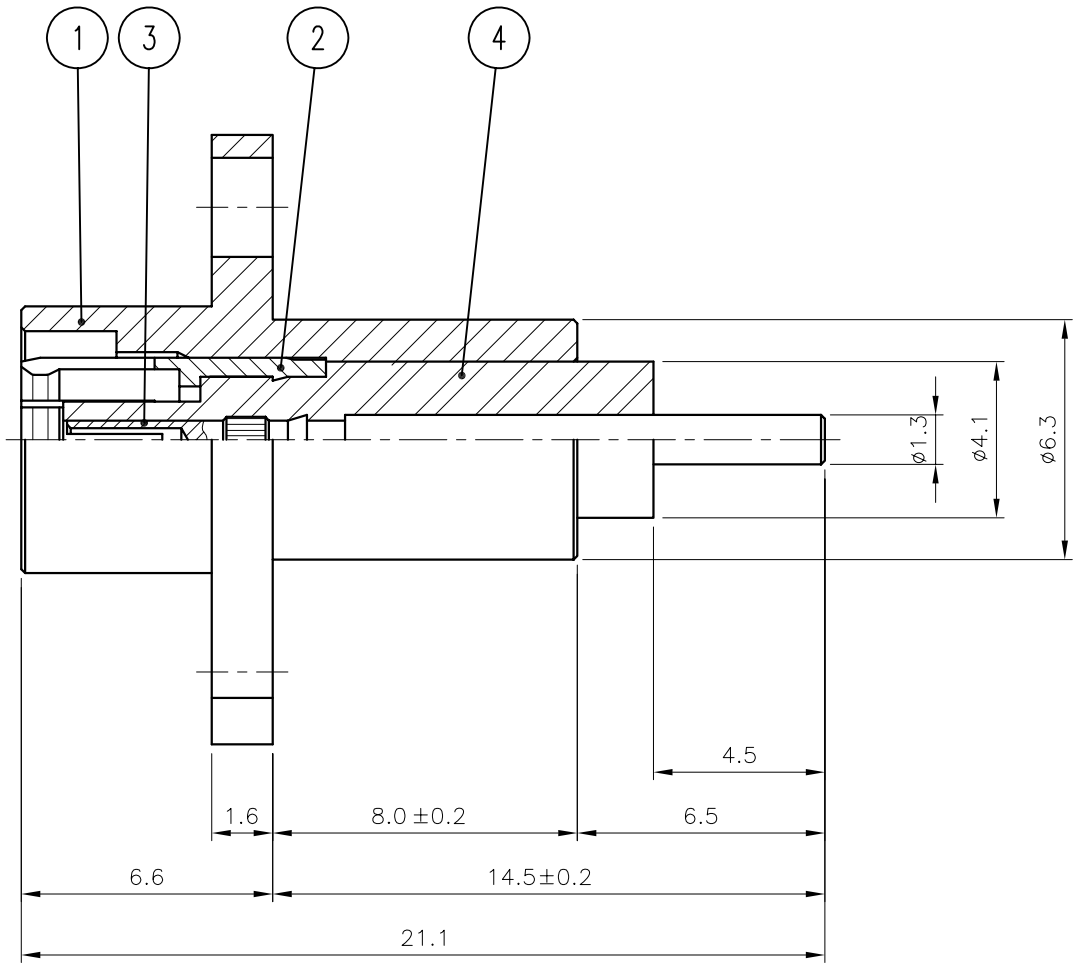

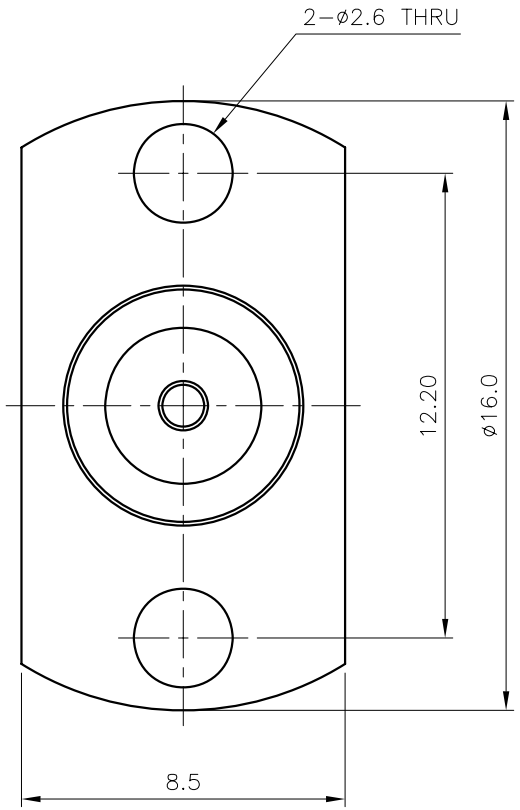

NO.	DESCRIPTION	Q'TY	MATERIAL	PLATING	CODE
4	INSULATOR	1	TEFLON		DIN02884-N/1
3	CONTACT	1	BeCu C17300	Gold Plate	DCT03820-5/1
2	JACK	1	MBsBD C3604BD-F	Nickel Plate	DJA00159-5/5
1	BODY	1	MBsBD C3604BD-F	Nickel Plate	DBD03113-5/3

TOLERANCE	Decimal ±0.1	DATE	2017. 03. 13.
	Angle ±1°	APPROVED BY	
		CHECKED BY	
MATERIAL		DRAWN BY	I.C.KIM
FINISH		SCALE 5/1	UNIT mm

KJ COMTECH
KJ COMTECH CO.,LTD.
RF & MICROWAVE TECHNOLOGY
Tel : 82-32-347-8015
Fax : 82-32-347-8017

TITLE
SMBL50 SOLDER END JS-2H

A4 | DWG NO. CN02830-7/4 | REVISION I R | SHEET 1 of 1