REVISION

REV	DESCRIPTION	DRAWN	APPR	DATE
IR	Initial Registration	I.C.KIM	J.H.YOUN	2012.02.03.
1	내부 방수 가스켓 추가	I.C.KIM		2020.05.13.
2	특성 튀는 현상 발생, BODY-B 억지끼움 외경 널링 변경	S.H.KIM		2023.06.22.

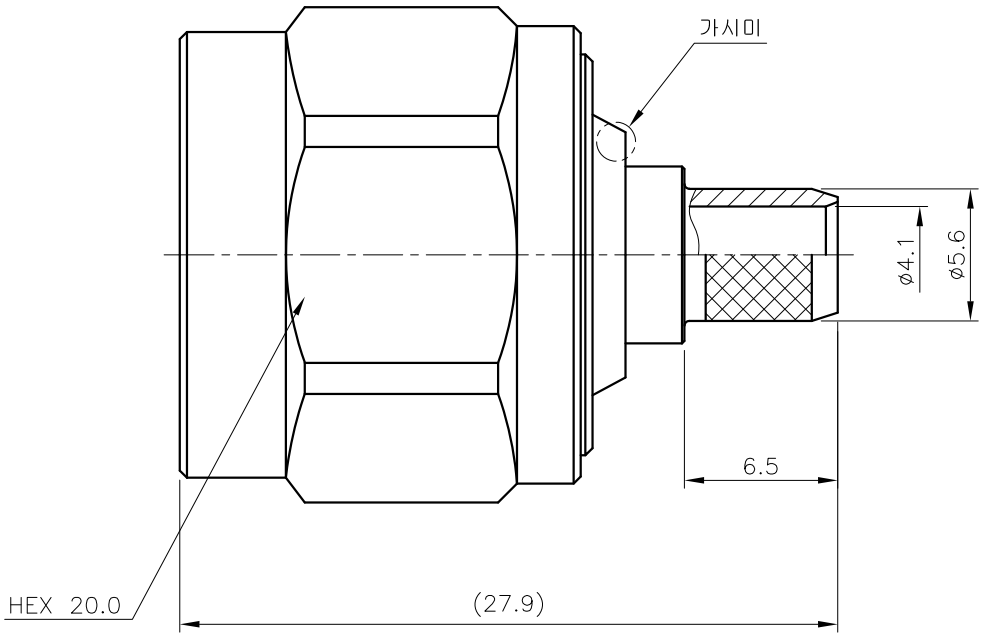

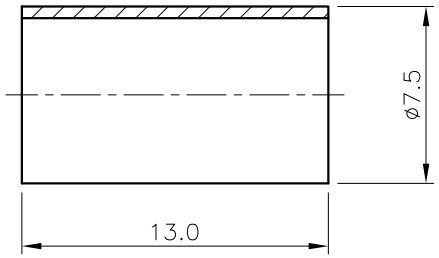

	NO.	DESCRIPTION	Q'TY	MATERIAL	PLATING	CODE
	9	SPRING RING	1	PBR	Nickel Plate	DSR00020-5/1
	8	COUPLING CAP	1	MBsBD C3604BD-F	Nickel Plate	DCU00063-5/3
	7	INSULATOR	1	TEFLON		DIN02014-N/1
1	6	GASKET	1	SILICONE RUB		DGK00269-N/2
	5	GASKET	1	SILICONE RUB		DGK00013-N/1
	4	FERRULE	1	MBsBD C3604BD-F	Nickel Plate	DFE00062-5/2
	3	CONTACT	1	MBsBD C3604BD-F	Gold Plate	DCT02608-5/1
2 1	2	BODY	1	MBsBD C3604BD-F	Nickel Plate	DBD03076-5/3 ~~DBD03076-5/1~~
	1	BODY	1	MBsBD C3604BD-F	Nickel Plate	DBD03071-5/1

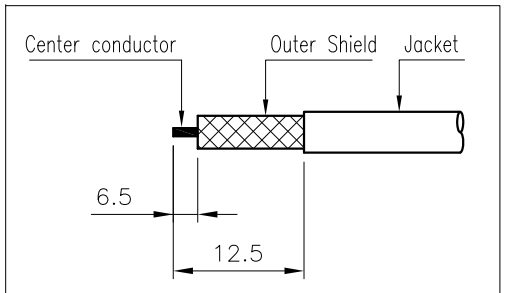

CABLE 탈피도

TOLERANCE	Decimal ±0.3	DATE	2023. 06. 22.
	Angle ±1°	APPROVED BY	
		CHECKED BY	
MATERIAL		DRAWN BY	S.H.KIM
FINISH		SCALE 3/1	UNIT mm

KJ COMTECH
KJ COMTECH CO.,LTD.
RF & MICROWAVE TECHNOLOGY
Tel : 82-32-347-8015
Fax : 82-32-347-8017

TITLE
N50 CABLE PS LMR240

A4 | DWG NO. CN02806-7/1 | REVISION 2 | SHEET 1 of 1