REVISION

REV	DESCRIPTION	DRAWN	APPR	DATE
IR	Initial Registration	I.C.KIM	J.H.YOUN	2012.06.21.
1	[설변처리No.201609-0004] 도금 단가로 인한 CAP CODE 변경	C.K.KIM	I.C.KIM	2012.09.13.
2	[설변처리No.201609-0009] 도금 단가로 인한 CAP CODE 변경	I.C.KIM		2016.09.21.

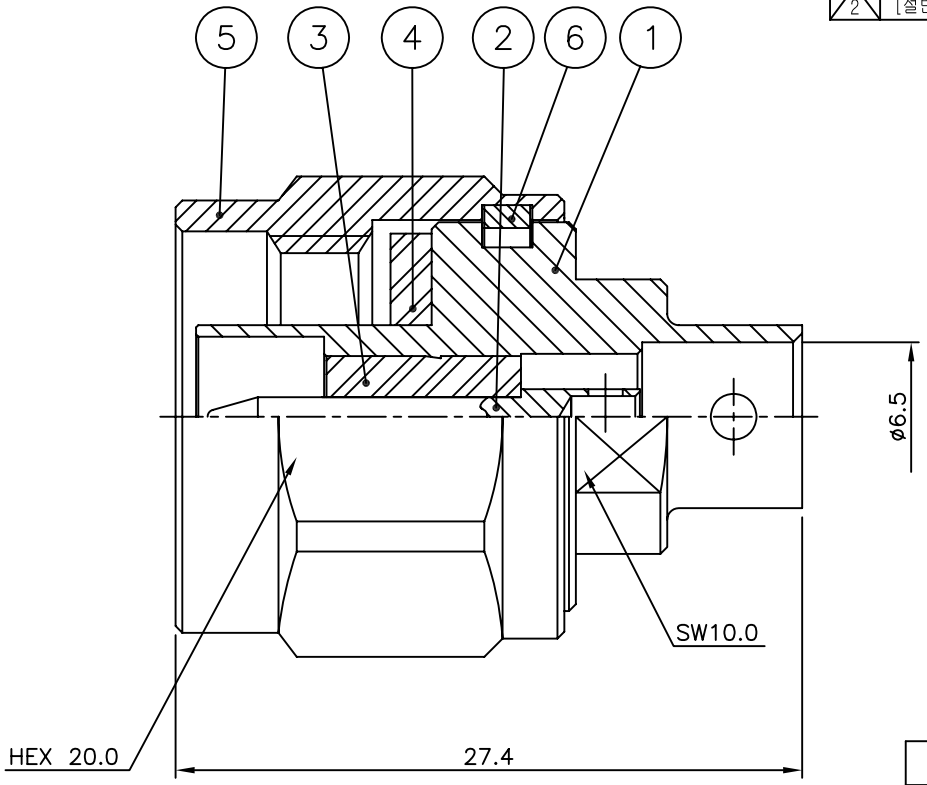

	NO.	DESCRIPTION	Q'TY	MATERIAL	PLATING	CODE
	6	SPRING RING	1	PBR	Nickel Plate	DSR00020-5/1
1	5	COUPLING CAP	1	MBsBD C3604BD-F	Nickel Plate ~~SUCO Plate~~	DCU00063-5/3 ~~DCU00063-5/1~~
	4	INSULATOR	1	TEFLON		DIN02014-N/1
	3	GASKET	1	SILICONE RUB		DGK00013-N/1
	2	CONTACT	1	MBsBD C3604BD-F	Silver Plate (3㎛)	DCT02609-5/2
2	~~2~~	~~BODY~~	~~1~~	~~MBsBD C3604BD-F~~	~~SUCO Plate~~	~~DBD03079-5/2~~
2	1	BODY	1	MBsBD C3604BD-F	SUCO Plate	DBD04235-5/1 ~~DBD03071-5/2~~

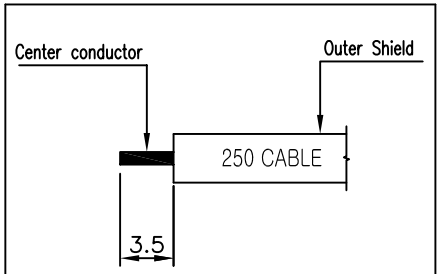

CABLE STRIPPING

TOLERANCE	Decimal ±0.1	DATE	2016. 09. 21.
	Angle ±1°	APPROVED BY	
		CHECKED BY	
MATERIAL		DRAWN BY	I.C.KIM
FINISH		SCALE 3/1	UNIT mm

KJ COMTECH
KJ COMTECH CO.,LTD.
RF & MICROWAVE TECHNOLOGY
Tel : 82-32-347-8015
Fax : 82-32-347-8017

TITLE
N50 CABLE PS 250

A4

DWG NO. CN02759-7/3

REVISION 2

SHEET 1 of 1