REVISION				
REV	DESCRIPTION	DRAWN	APPR	DATE
IR	Initial Registration	S.Y.EUN	I.C.KIM	2019.08.05.

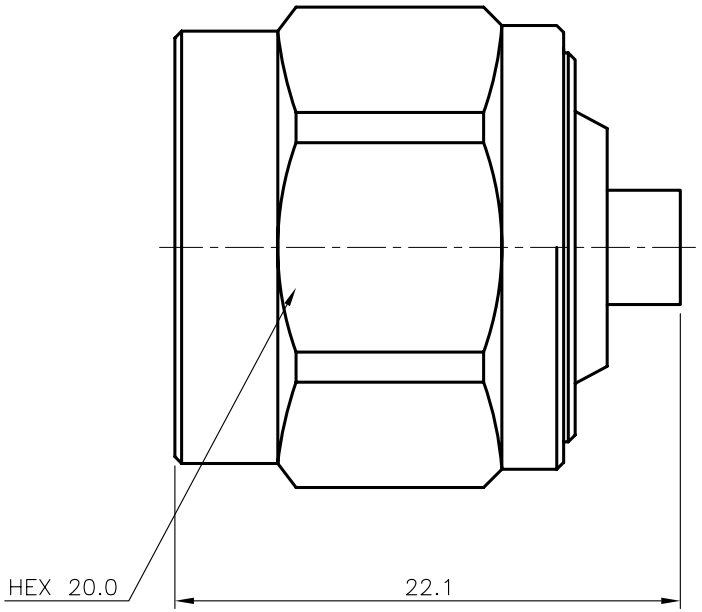

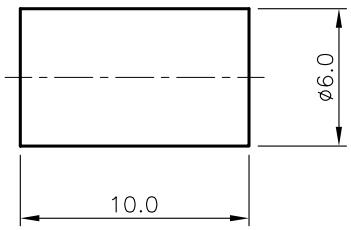

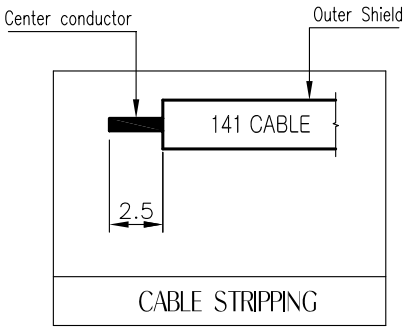

주 기
1. CAP 조립전 가시미 작업 진행

NO.	DESCRIPTION	Q'TY	MATERIAL	PLATING	CODE
8	FERRULE	1	MBsBD C3604BD-F	Nickel Plate	DFE00163-5/1
7	SPRING RING	1	PBR	Nickel Plate	DSR00020-5/1
6	COUPLING CAP	1	MBsBD	Nickel Plate	DCU00063-5/3
5	INSULATOR	1	TEFLON		DIN02014-N/1
4	GASKET	1	SILICONE RUB		DGK00013-N/1
3	CONTACT	1	MBsBD	Gold Plate	DCT02607-5/1
2	BODY	1	MBsBD	Gold Plate	DBD03073-5/1
1	BODY	1	MBsBD	Nickel Plate	DBD03071-5/1

TOLERANCE	Decimal ±0.3	DATE	2019. 08. 05.
	Angle ±1°	APPROVED BY	I.C.KIM
MATERIAL		CHECKED BY	
		DRAWN BY	S.Y.EUN
FINISH		SCALE 3/1	UNIT mm

KJ COMTECH
KJ COMTECH CO.,LTD.
RF & MICROWAVE TECHNOLOGY
Tel : 82-32-347-8015
Fax : 82-32-347-8017

TITLE
N50 CABLE PS 141 FJ

A4 | DWG NO. CN02758-7/7 | REVISION I R | SHEET 1 of 1