REVISION				
REV	DESCRIPTION	DRAWN	APPR	DATE
IR	Initial Registration	G.Y.KIM	I.C.KIM	2016.10.19.

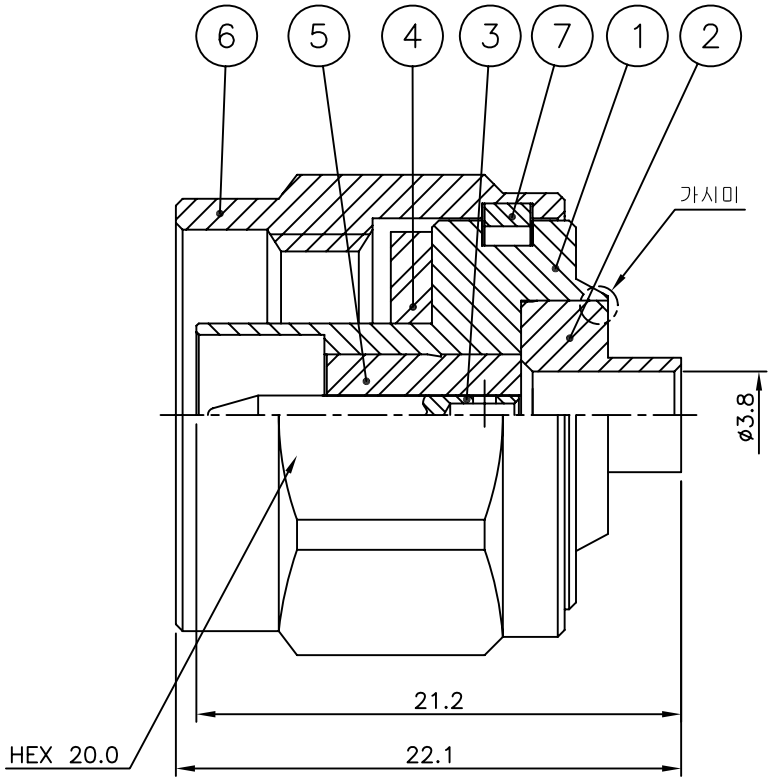

주 기

1. CAP 조립전 가시미 작업 진행

NO.	DESCRIPTION	Q'TY	MATERIAL	PLATING	CODE
7	SPRING RING	1	PBR	Nickel Plate	DSR00020-5/1
6	COUPLING CAP	1	MBsBD C3604BD-F	Nickel Plate	DCU00063-5/3
5	INSULATOR	1	TEFLON		DIN02014-N/1
4	GASKET	1	SILICONE RUB		DGK00013-N/1
3	CONTACT	1	MBsBD C3604BD-F	Silver Plate (3㎛)	DCT02607-5/2
2	BODY	1	MBsBD C3604BD-F	Nickel Plate	DBD03073-5/3
1	BODY	1	MBsBD C3604BD-F	Nickel Plate	DBD03071-5/4

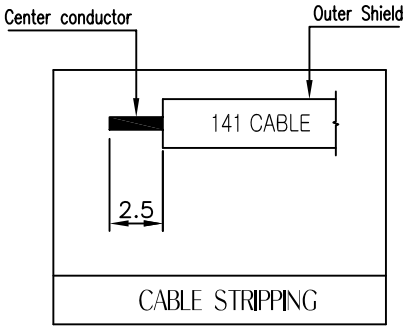

TOLERANCE	Decimal ±0.1	DATE	2016. 10. 19.
	Angle ±1°	APPROVED BY	I.C.KIM
		CHECKED BY	C.K.KIM
MATERIAL		DRAWN BY	G.Y.KIM
FINISH		SCALE 3/1	UNIT mm

KJ COMTECH
KJ COMTECH CO.,LTD.
RF & MICROWAVE TECHNOLOGY
Tel : 82-32-347-8015
Fax : 82-32-347-8017

TITLE: N50 CABLE PS 141

A4 | DWG NO. CN02758-7/5 | REVISION I R | SHEET 1 of 1