REVISION

REV	DESCRIPTION	DRAWN	APPR	DATE
IR	Initial Registration	I.C.KIM	J.H.YOUN	2011.12.20.
1	[설변처리No.201201-0005] 공차 관리치수 변경	I.C.KIM	J.H.YOUN	2011.12.20.
2	[설변처리No.201202-0001] 고객사 요청 치수 및 형상 변경	I.C.KIM	J.H.YOUN	2012.02.01.
3	[설변처리No.201203-0005] 고객사 요청 형상 변경	I.C.KIM	J.H.YOUN	2012.03.23.

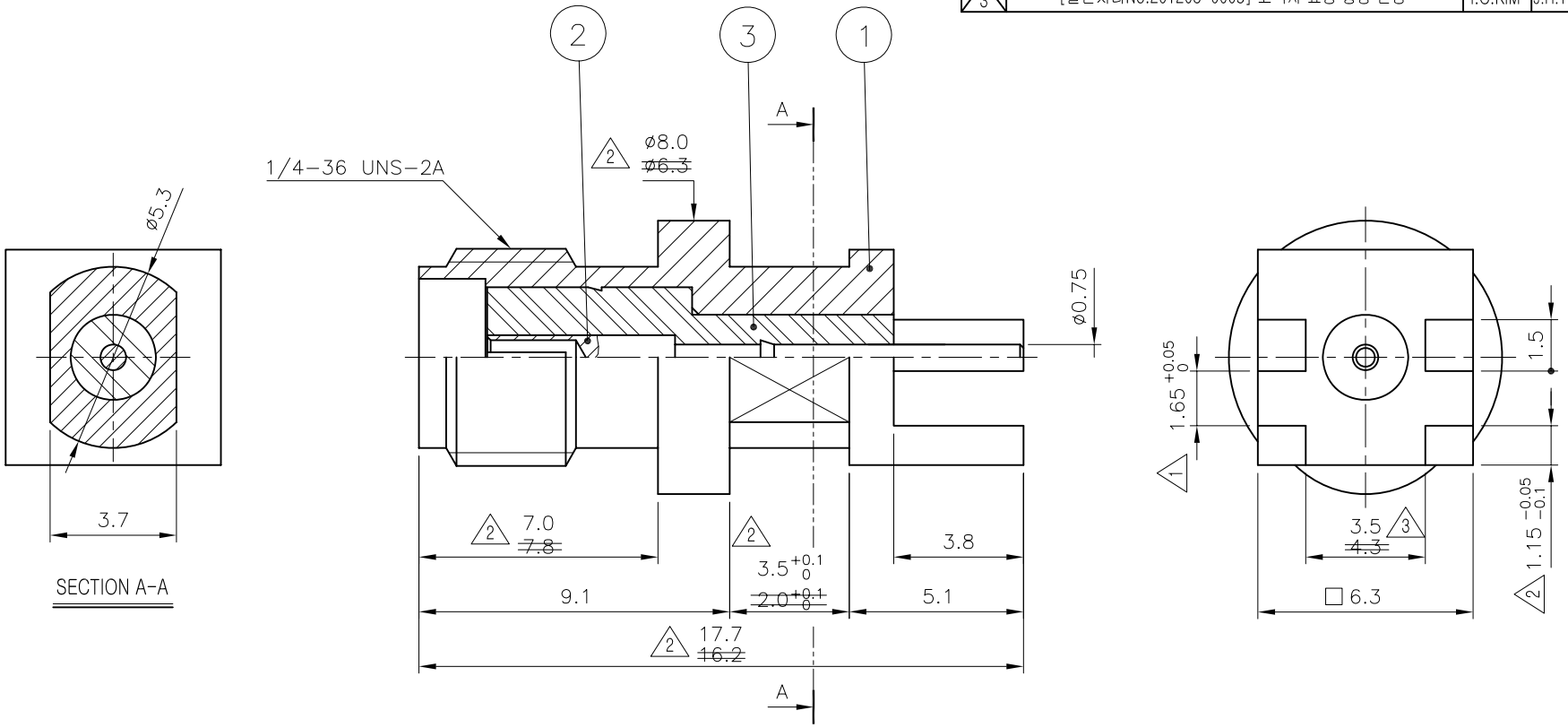

NO.	DESCRIPTION	Q'TY	MATERIAL	PLATING	CODE
3	INSULATOR	1	TEFLON		DIN01963-N/2 ~~DIN01963-N/1~~
2	CONTACT	1	BeCu	Gold Plate	DCT02522-5/2 ~~DCT02522-5/1~~
1	BODY	1	MBsBD	Gold Plate	DBD02991-5/3 ~~DBD02991-5/2~~

TOLERANCE	Decimal ±0.1	DATE	2012. 03. 23.
	Angle ±1°	APPROVED BY	J.H.YOUN
		CHECKED BY	
MATERIAL		DRAWN BY	I.C.KIM
FINISH		SCALE 5/1	UNIT mm

KJ COMTECH
KJ COMTECH CO.,LTD.
RF & MICROWAVE TECHNOLOGY
Tel : 82-32-347-8015
Fax : 82-32-347-8017

TITLE
SMA50 PCB JS-4R (edge) PCB

A4 | DWG NO. CN02739-7/3 | REVISION 3 | SHEET 1 of 1