REVISION				
REV	DESCRIPTION	DRAWN	APPR	DATE
IR	Initial Registration	I.C.KIM	Y.H.CHOI	2011.04.11.
1	[설변No.201810-0003] 원가절감 및 MATING 개선으로 인한 링 삭제	S.Y.EUN	I.C.KIM	2018.10.10.
2	[설변No.202006-0005] 메이팅 표준화로 인한 링 재추가	S.Y.EUN	I.C.KIM	2020.06.16.

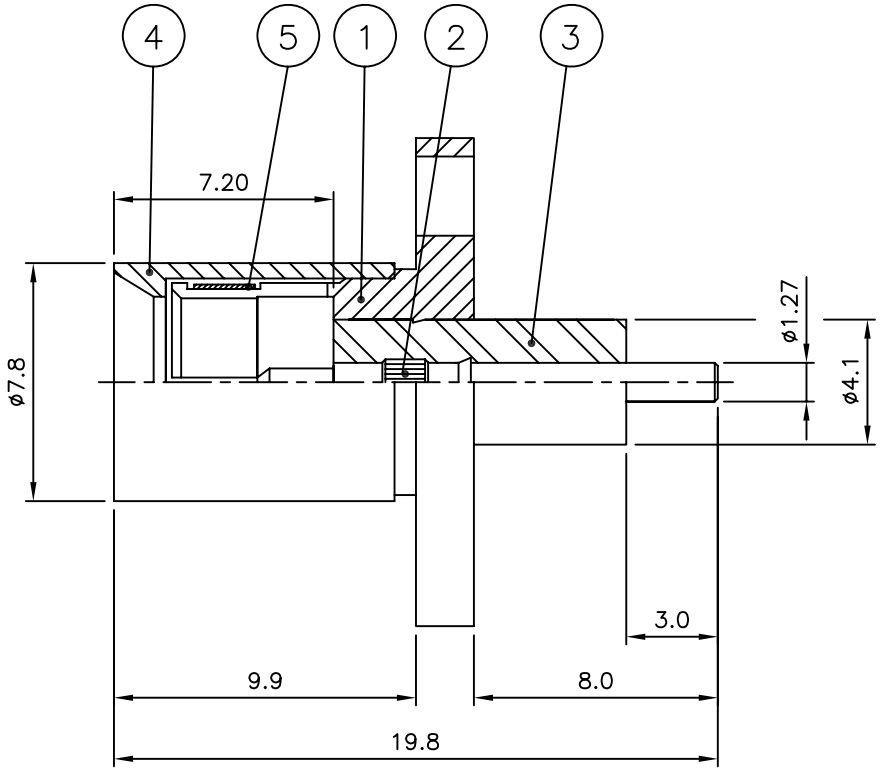

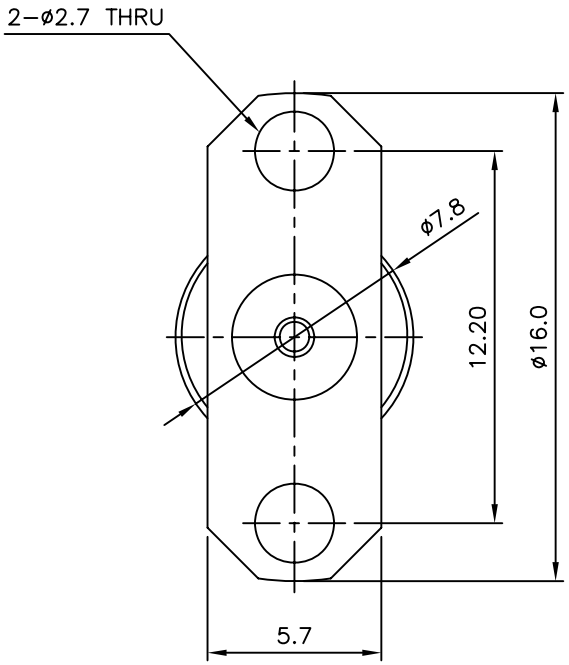

	NO.	DESCRIPTION	Q'TY	MATERIAL	PLATING	CODE
2 1	5	SPRING RING	1	BeCu	Nickel Plate	DSR00007-5/1
	4	CAP	1	MBsBD	Nickel Plate	DCU02182-5/1
	3	INSULATOR	1	TEFLON		DIN01894-N/1
	2	CONTACT	1	MBsBD	Gold Plate	DCT02426-5/1
	1	BODY	1	MBsBD	Nickel Plate	DBD02904-5/1

TOLERANCE	Decimal ±0.2	DATE	2020. 06. 16.
	Angle ±1°	APPROVED BY	I.C.KIM
MATERIAL	———	CHECKED BY	
		DRAWN BY	S.Y.EUN
FINISH	———	SCALE 4/1	UNIT mm

KJ COMTECH
KJ COMTECH CO.,LTD.
RF & MICROWAVE TECHNOLOGY
Tel : 82-32-347-8015
Fax : 82-32-347-8017

TITLE
SMA trans(Φ5.5) SOLDER END PS-2H

A4

DWG NO. CN02661-7/1

REVISION 2

SHEET 1 of 1