REVISION				
REV	DESCRIPTION	DRAWN	APPR	DATE
IR	Initial Registration	S.Y.EUN	I.C.KIM	2018.08.06.
1	생산팀 요청으로 인한 본딩튜브 사이즈 변경 (ø13 →ø12)	S.Y.EUN	I.C.KIM	2021.02.24.

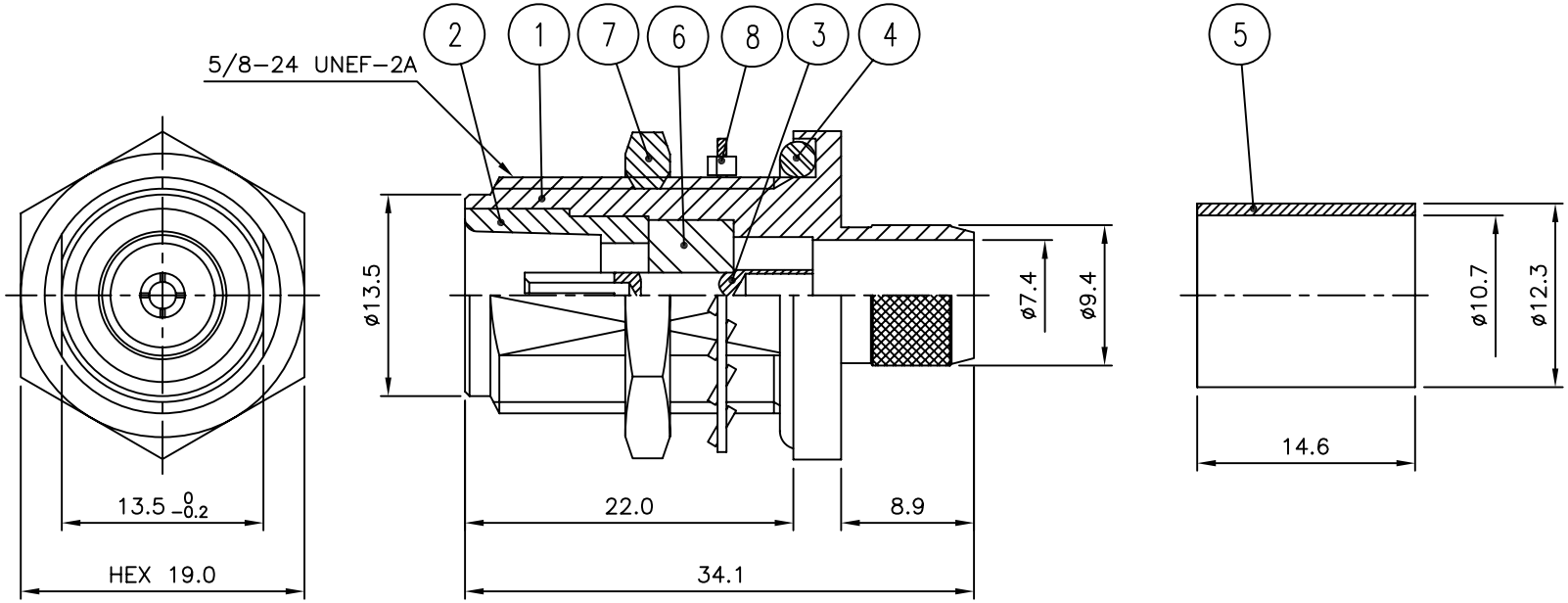

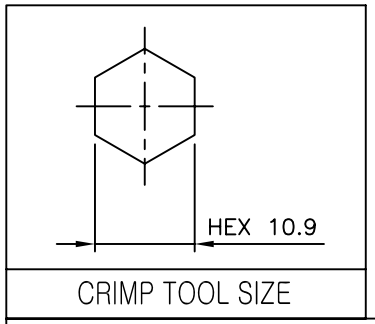

CRIMP TOOL SIZE

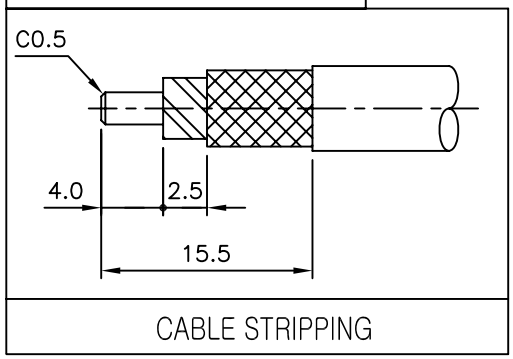

CABLE STRIPPING

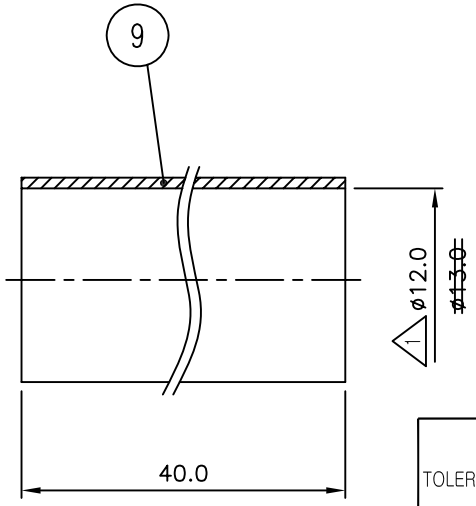

NO.	DESCRIPTION	Q'TY	MATERIAL	PLATING	CODE
9	BONDING TUBE	1	—	—	ATU00012-N/1 ~~ATU00013-N/1~~
8	WASHER	1	BsS	Nickel Plated	DWA00045-5/1
7	NUT	1	MBsBD C3604BD-F	Nickel Plated	DNT00033-5/1
6	INSULATOR	1	TEFLON		DIN01367-N/1
5	FERRULE	1	MBsBD C3604BD-F	Nickel Plated	DFE00076-5/1
4	GASKET	1	NBR	BLACK	DGK00046-N/1
3	CONTACT	1	BeCu C17300	Gold Plated	DCT01684-5/1
2	BODY	1	MBsBD C3604BD-F	Nickel Plated	DBD01526-5/1
1	BODY	1	MBsBD C3604BD-F	Nickel Plated	DBD02853-5/1

TOLERANCE	Decimal ±0.2	DATE	2021. 02. 24.
	Angle ±1°	APPROVED BY	I.C.KIM
		CHECKED BY	
MATERIAL	—	DRAWN BY	S.Y.EUN
FINISH	—	SCALE 2/1	UNIT mm

KJ COMTECH
KJ COMTECH CO, LTD
RF & MICROWAVE TECHNOLOGY
Tel : 82-32-347-8015
Fax : 82-32-347-8017

TITLE: N50 CABLE JB (F/N) LMR400

A4 | DWG NO. CN02624-7/2 | REVISION 1 | SHEET 1 of 1