REVISION		
REV	DESCRIPTION	DATE
IR	Initial Registration	2010. 02. 23.

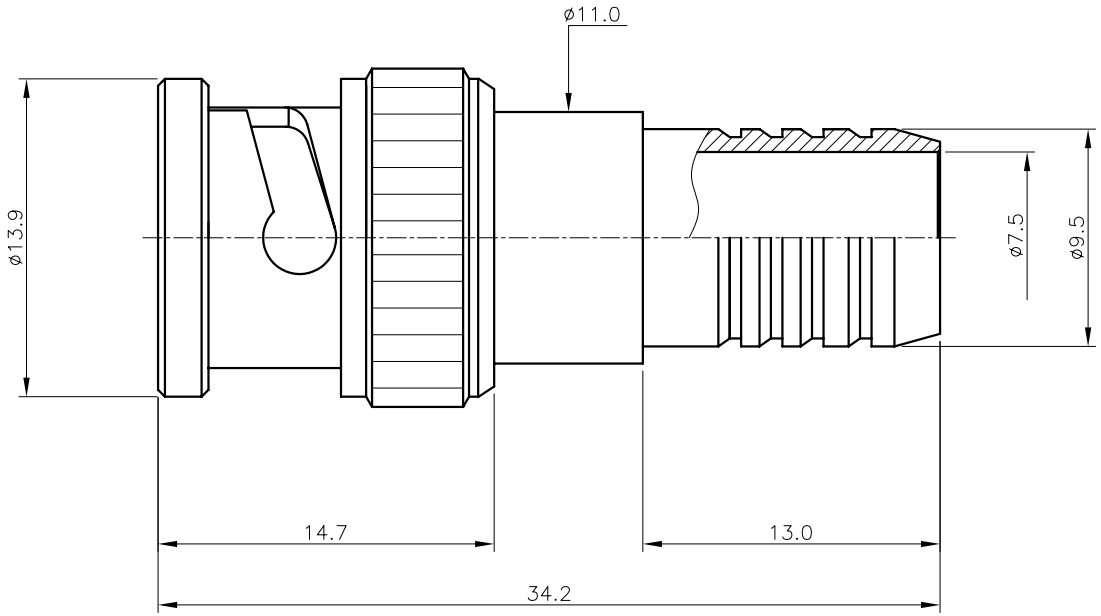

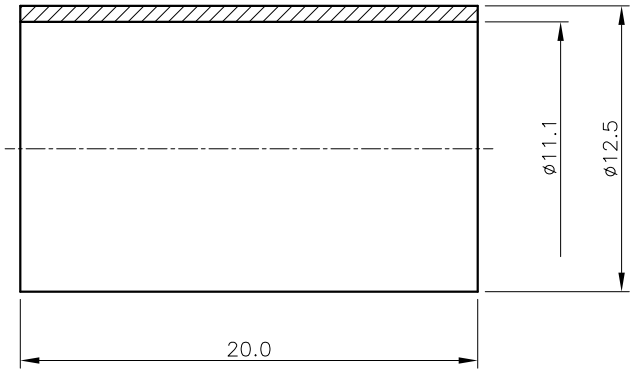

	MATERIAL	PLATING
BODY	BRASS	Nickel
CONTACT	BRASS	Gold
CAP	ZnDC	Nickel
FERRULE	BRASS	Nickel

NO.	DESCRIPTION	Q'TY	MATERIAL	PLATING	CODE

TOLERANCE	Decimal ±0.1	DATE	2010. 02. 23.
	Angle ±1°	APPROVED BY	Y.H.CHOI
		CHECKED BY	
MATERIAL	-	DRAWN BY	I.C.KIM
FINISH	-	SCALE 3/1	UNIT mm

KJ COMTECH
KJ COMTECH CO.,LTD.
RF & MICROWAVE TECHNOLOGY
Tel : 82-32-347-8015
Fax : 82-32-347-8017

TITLE
BNC50 CABLE PS RG214(50Ω)

A4

DWG NO. CN02546-N/1

REVISION I R

SHEET 1 of 1