REVISION				
REV	DESCRIPTION	DRAWN	APPR	DATE
IR	Initial Registration	D.W.KANG	Y.H.CHOI	2010.08.27.

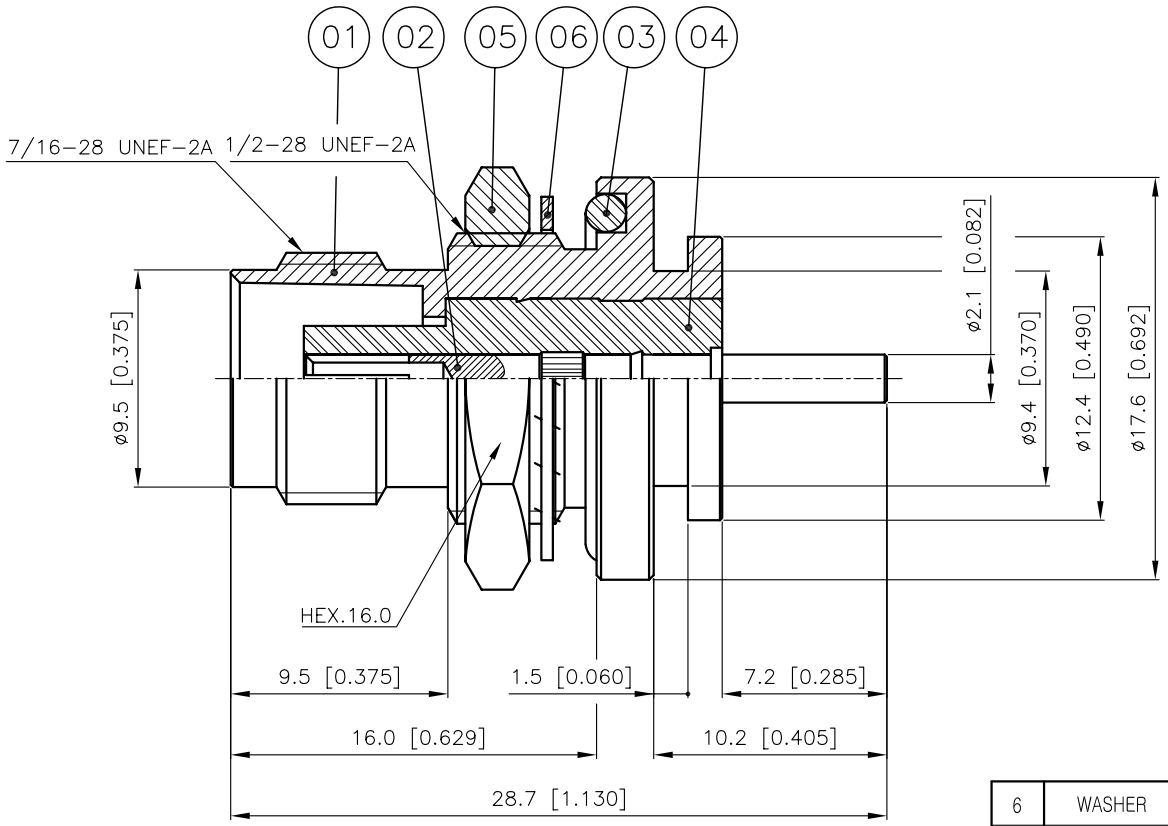

NO.	DESCRIPTION	Q'TY	MATERIAL	PLATING	CODE
6	WASHER	1	BRASS	Nickel Plated	DWA00022-5/1
5	NUT	1	BRASS	Nickel Plated	DNT00020-5/1
4	INSULATOR	1	PTFE		DIN01690-N/1
3	GASKET	1	SILICONE RUB		DGK00036-N/1
2	CONTACT	1	Beryllium copper	Gold Plated	DCT02317-5/1
1	BODY	1	BRASS	Nickel Plated	DBD02803-5/2

* Note*

- 개별 포장 할 것.

TOLERANCE	Decimal ±0.1	DATE	2010. 08. 27.
	Angle ±1°	APPROVED BY	Y.H.CHOI
		CHECKED BY	I.C.KIM
MATERIAL	———	DRAWN BY	D.W.KANG
FINISH	———	SCALE 3/1	UNIT mm

KJ COMTECH
KJ COMTECH CO.,LTD.
RF & MICROWAVE TECHNOLOGY
Tel : 82-32-347-8015
Fax : 82-32-347-8017

TITLE
TNC50 SOLDER END JB (F/N)

A4

DWG NO. CN02490-7/3

REVISION I R

SHEET 1 of 1