REVISION		
REV	DESCRIPTION	DATE
IR	최초개정	2009.07.10.

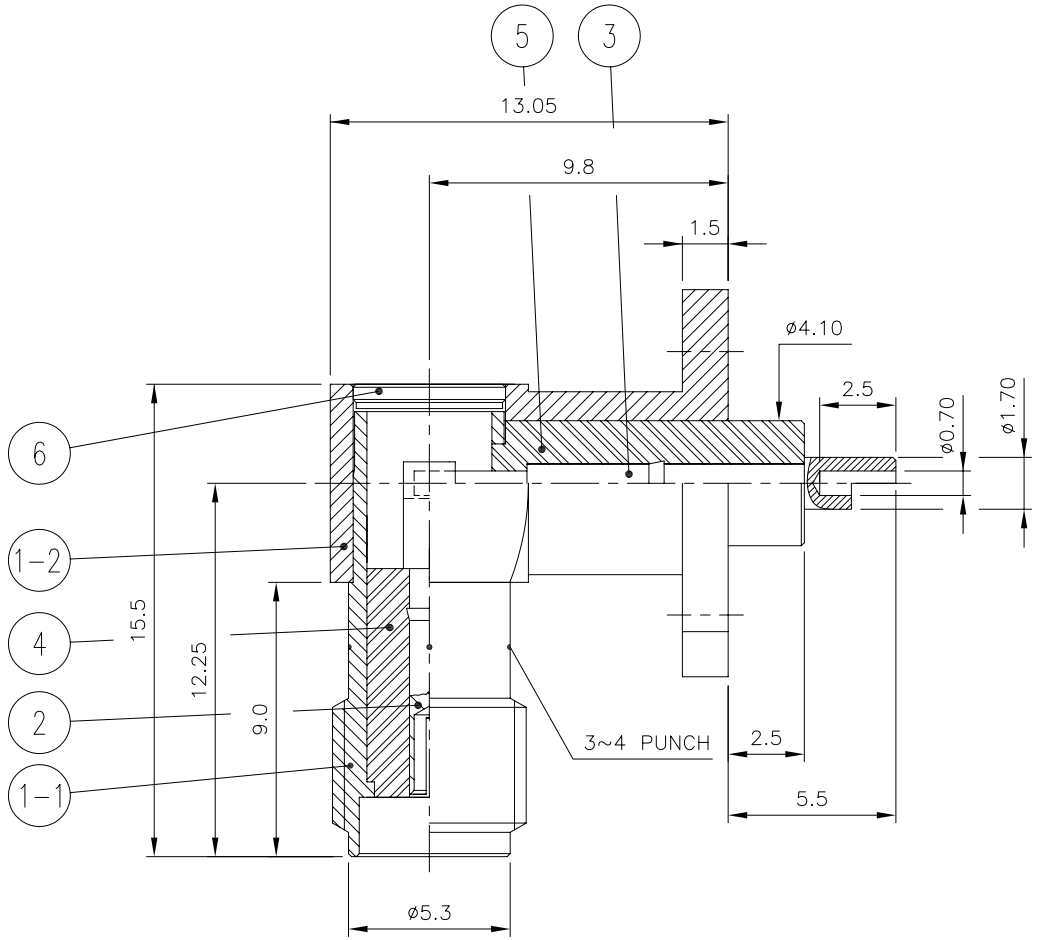

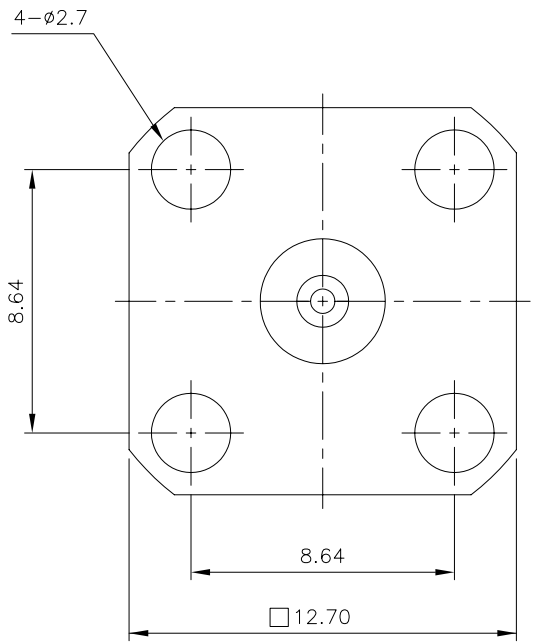

NO.		DESCRIPTION	Q'TY	MATERIAL	PLATING	CODE	
6		COVER	1	MBsBD	Gold Plate	DCO00032-5/1	
5		INSULATOR	1	TEFLON		DIN01255-N/1	
4		INSULATOR	1	TEFLON		DIN01610-N/1	
3		CONTACT	1	MBsBD	Gold Plate	DCT02044-5/1	
2		CONTACT	1	BeCu	Gold Plate	DCT02043-5/1	
1	1-2	BODY	1	MBsBD	Gold Plate	DBB00241-5/1	DBD02540-3/1
	1-1	BODY	1	MBsBD	Gold Plate		DBD02539-3/1

주 기

1. PIN CUTTING 방향 맞춰서 조립 할 것.

TOLERANCE	Decimal ±0.1	DATE	2009. 07. 10.
	Angle ±1°	APPROVED BY	S.J.YOUN
MATERIAL	———	CHECKED BY	E.H.KIM
		DRAWN BY	I.C.KIM
FINISH	———	SCALE 4/1	UNIT mm

KJ COMTECH
KJ COMTECH CO.,LTD.
RF & MICROWAVE TECHNOLOGY
Tel : 82-32-347-8015
Fax : 82-32-347-8017

TITLE: SMA50 SOLDER END JL-4H

A4 | DWG NO. CN02425-7/1 | REVISION I R | SHEET 1 of 1