REVISION				
REV	DESCRIPTION	DRAWN	APPR	DATE
IR	Initial Registration	H.J.LEE	I.C.KIM	2015. 03. 25.
1	공용화 치수 적용으로 인한 핀, 절연체 변경	S.Y.EUN	I.C.KIM	2021. 02. 10.
2	바디 부품도면과 동일하게 치수 변경 (⌀5.0 → ⌀4.5)	S.Y.EUN	I.C.KIM	2021. 03. 02.

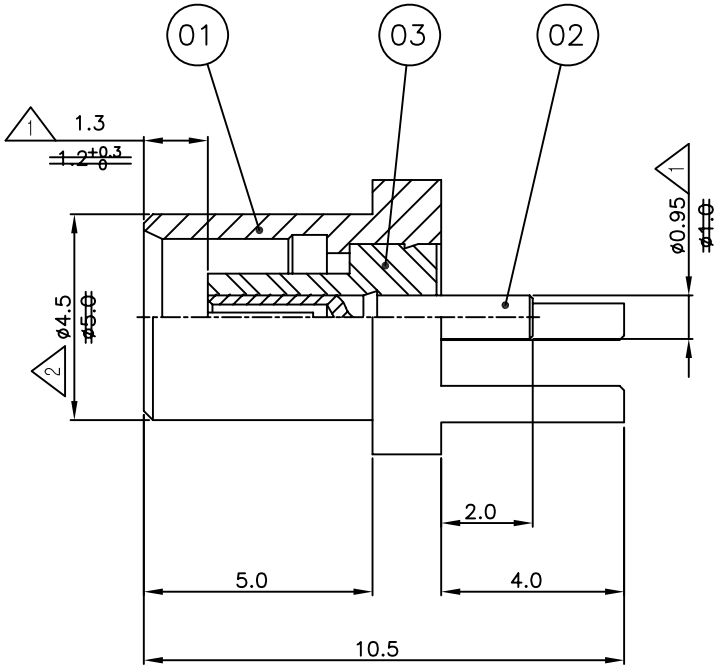

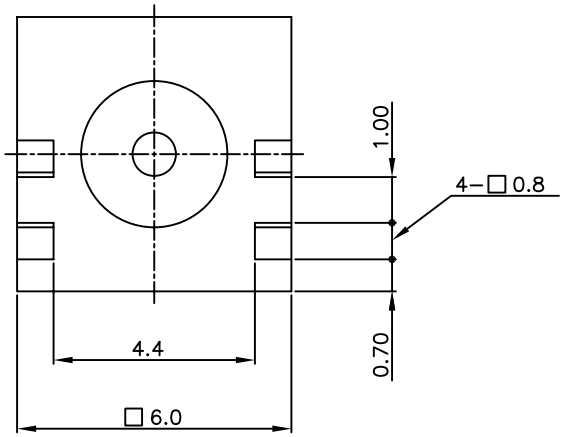

	NO.	DESCRIPTION	Q'TY	MATERIAL	PLATING	CODE
1	3	INSULATOR	1	TEFLON		DIN01542-N/3 ~~DIN01542-N/2~~
1	2	CONTACT(A)	1	BeCu C17300	Gold Plate	DCT04123-5/1 ~~DCT01949-5/2~~
	1	BODY	1	MBsBD C3604BD-F	Gold Plate	DBD02434-5/2

TOLERANCE	Decimal ±0.1	DATE	2021. 03. 02.
	Angle ±1°	APPROVED BY	I.C.KIM
		CHECKED BY	
MATERIAL		DRAWN BY	S.Y.EUN
FINISH		SCALE 6/1	UNIT mm

KJ COMTECH
KJ COMTECH CO.,LTD.
RF & MICROWAVE TECHNOLOGY
Tel : 82-32-347-8015
Fax : 82-32-347-8017

TITLE
MCX50 PCB JS-4R

A4

DWG NO. CN02363-7/2

REVISION 2

SHEET 1 of 1