REVISION		
REV	DESCRIPTION	DATE
IR	최초 개정	2009. 02. 13.

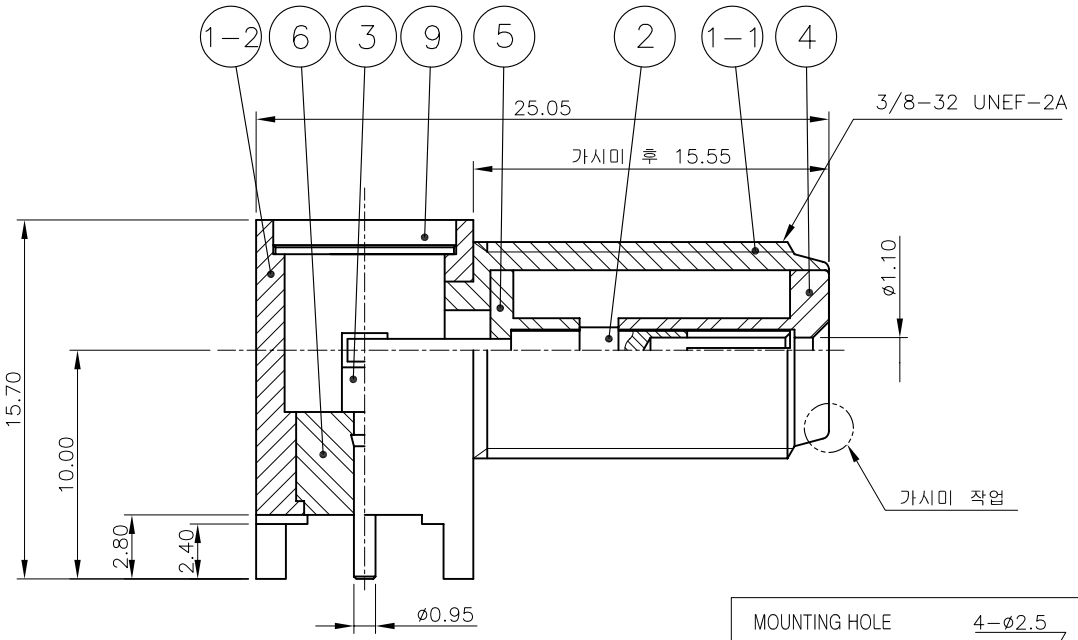

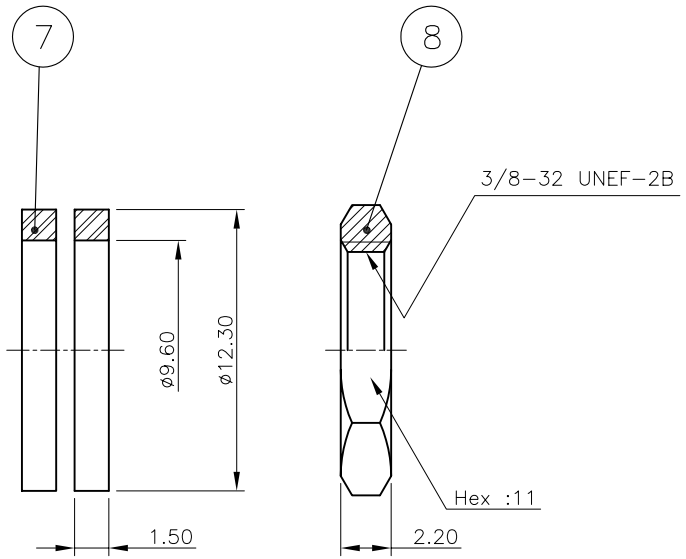

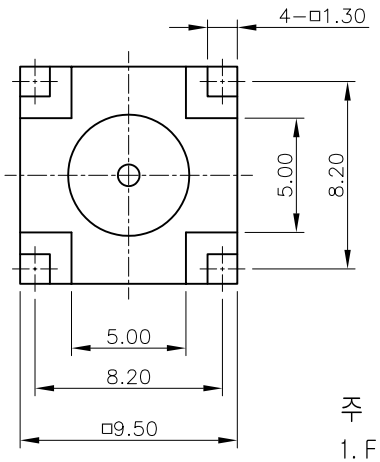

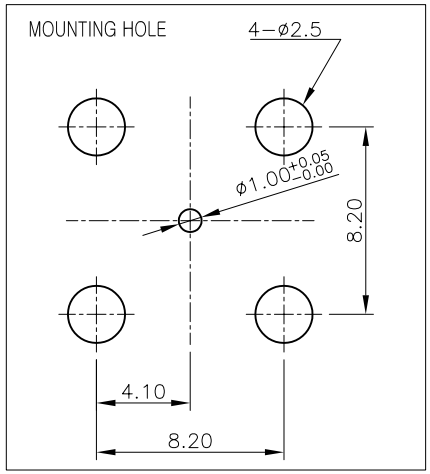

NO.	DESCRIPTION	Q'TY	MATERIAL	PLATING	CODE	
9	COVER	1	MBsBD	Nickel Plate	DCO00051-5/1 (N6019)	
8	NUT	1	MBsBD	Nickel Plate	DNT00029-5/1 (N6004)	
7	WAHER INSULATOR	2	TEFLON	White	DIN01511-N/1	
6	INSULATOR	1	TEFLON	White	DIN01271-N/1	
5	INSULATOR	1	TEFLON	White	DIN01510-N/1	
4	INSULATOR	1	TEFLON	White	DIN00776-N/1	
3	CONTACT	1	MBsBD	Gold Plate	DCT01907-5/1	
2	CONTACT	1	BeCu	Gold Plate	DCT01908-5/1	
1 1-2	사각 BODY	1	MBsBD	Nickel Plate	DBB00212-5/1	DBD02386-3/1
1 1-1	원형 BODY	1	MBsBD	Nickel Plate		DBD02385-1/1

주 기

1. F 가시미 작업 시 받침 지그 CEQ00106-7/1를 사용 할 것.

TOLERANCE	Decimal ±0.1	DATE	2009. 02. 13.
	Angle ±1°	APPROVED BY	S.J.YOUN
MATERIAL	-	CHECKED BY	I.C.KIM
		DRAWN BY	E.H.KIM
FINISH	-	SCALE 3/1	UNIT mm

KJ COMTECH
KJ COMTECH CO.,LTD.
RF & MICROWAVE TECHNOLOGY
Tel : 82-32-347-8015
Fax : 82-32-347-8017

TITLE F75-LJ-4R-R

A4 DWG NO. CN02336-7/1

REVISION I R SHEET 1 of 1