REVISION		
REV	DESCRIPTION	DATE
IR	Initial Revision	2009.02.04.
A	특성 개선으로 인한 Pin 외경 변경 ø6.0->ø5.7	2009.03.11.
B	특성 개선으로 인한 Pin 외경 변경 ø5.7->ø5.62	2009.07.13.
C	[설변처리 No.200907-0004]특성 개선으로 인한 Pin 길이 변경	2009.07.13.

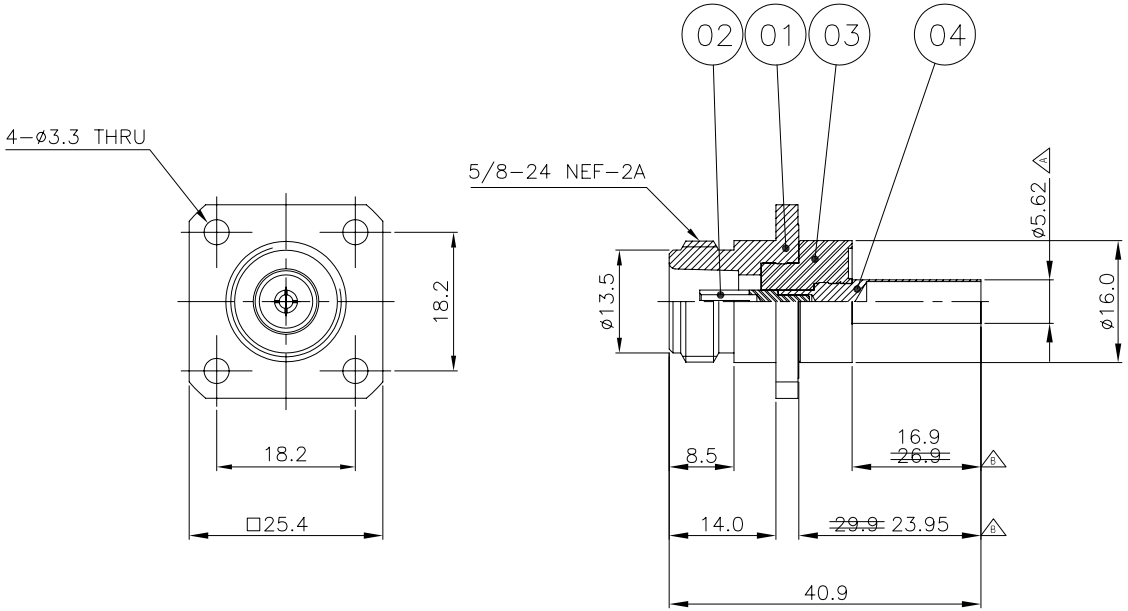

NO.	DESCRIPTION	Q'TY	MATERIAL	PLATING	CODE
4	CONTACT	1	MBsBD	Silver Plate (6㎛)	DCT01764-5/3 ~~DCT01764-5/2~~
3	INSULATOR	1	TEFLON		DIN01420-N/2
2	CONTACT	1	BeCu	Silver Plate (7㎛)	DCT00689-5/2
1	BODY	1	MBsBD	SUCO Plate (6㎛)	DBD02235-5/3 ~~DBD02235-5/2~~

TOLERANCE	Decimal ±0.1	DATE	2009. 07. 13.
	Angle ±1°	APPROVED BY	J.H.YOUN
MATERIAL		CHECKED BY	M.H.LEE
		DRAWN BY	K.I.CHO
FINISH		SCALE 1/1	UNIT mm

KJ COMTECH
KJ COMTECH CO.,LTD.
RF & MICROWAVE TECHNOLOGY
Tel : 82-32-347-8015
Fax : 82-32-347-8017

TITLE: N50 SOLDER END JS-4H

A4 | DWG NO. CN02329-7/3 | REVISION C | SHEET 1 of 1