REVISION		
REV	DESCRIPTION	DATE
IR	최초 개정	2009.02.03.

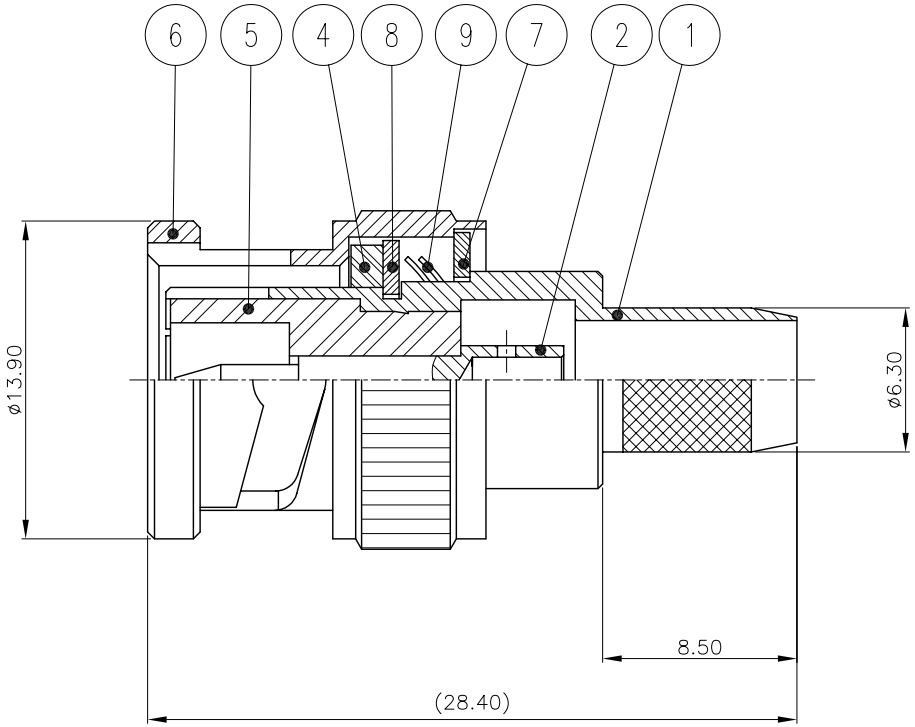

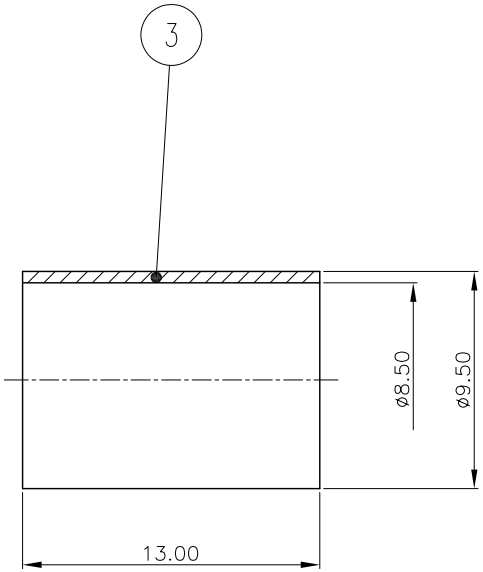

NO.	DESCRIPTION	Q'TY	MATERIAL	PLATING	CODE
9	SPRING WASHER	2	Beryllium copper	Nickel Plated	DWA00069-5/1 (R6001)
8	WASHER	2	BsS	Nickel Plated	DWA00016-5/1 (Q6002)
7	WASHER	1	BsS	Nickel Plated	DWA00015-5/1 (Q6001)
6	CAP	1	BRASS	Nickel Plated	DCU00044-5/1 (K6001)
5	INSULATOR	1	PTFE		DIN01495-N/1
4	GASKET	1	SILICONE RUB		DGK00012-N/1 (G6001)
3	FERRULE	1	BRASS	Nickel Plated	DFE00078-5/1 (F6422)
2	CONTACT	1	BRASS	Gold Plated	DCT01884-5/1
1	BODY	1	BRASS	Nickel Plated	DBD02362-5/1

TOLERANCE	Decimal ±0.1	DATE	2009. 02. 03.
	Angle ±1°	APPROVED BY	S.J.YOUN
MATERIAL	———	CHECKED BY	E.H.KIM
		DRAWN BY	I.C.KIM
FINISH	———	SCALE 2.5/1	UNIT mm

KJ COMTECH
KJ COMTECH CO.,LTD.
RF & MICROWAVE TECHNOLOGY
Tel : 82-32-347-8015
Fax : 82-32-347-8017

TITLE: BNC50-P5-5D-FB

A4 | DWG NO. CN02319-7/1 | REVISION I R | SHEET 1 of 1