REVISION		
REV	DESCRIPTION	DATE
IR	최초 개정	2009.02.04.

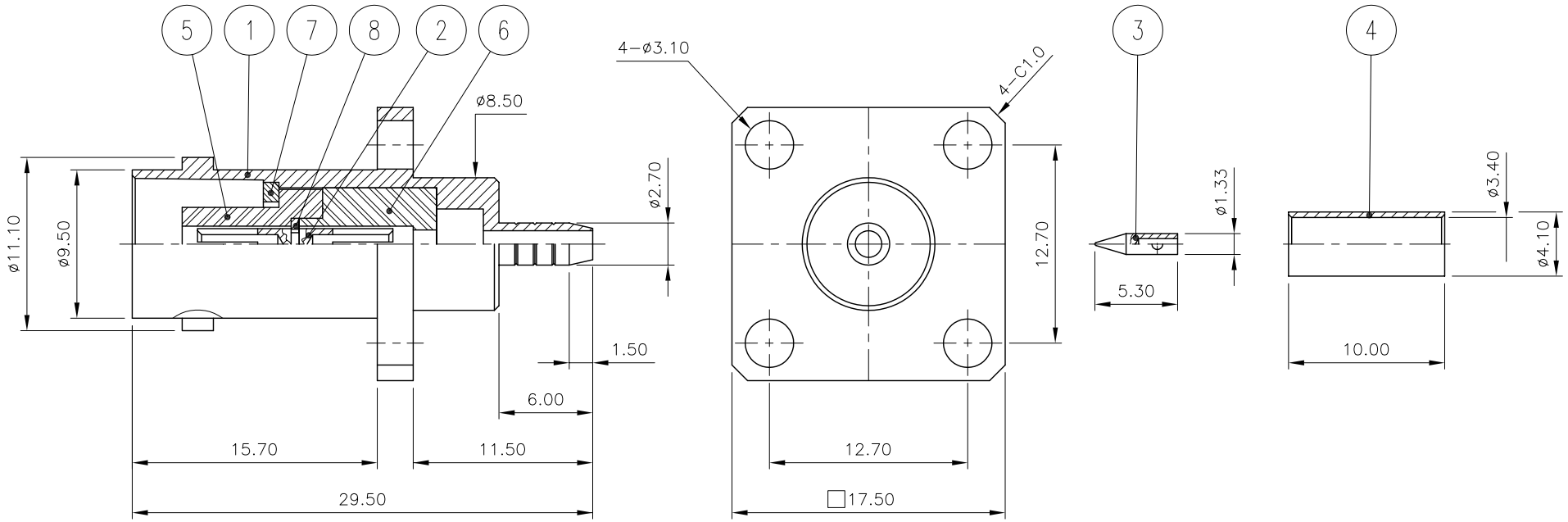

NO.	DESCRIPTION	Q'TY	MATERIAL	PLATING	CODE
8	RING	1	BRASS	Nickel Plated	DSR00048-5/1 (L6009)
7	RING	1	BRASS	Nickel Plated	DSR00051-5/1 (L7009)
6	INSULATOR	1	PTFE		DIN00425-N/1 (H6051)
5	INSULATOR	1	PTFE		DIN00477-N/1 (H6020)
4	FERRULE	1	BRASS	Gold Plated	DFE00075-5/1 (F3021)
3	CONTACT	1	BRASS	Gold Plated	DCT00462-5/1 (E6017)
2	CONTACT	1	Beryllium copper	Gold Plated	DCT00479-5/1 (E6016)
1	BODY	1	BRASS	Nickel Plated	DBD00627-5/1 (D6024)

TOLERANCE	Decimal ±0.1	DATE	2009. 02. 04.
	Angle ±1°	APPROVED BY	S.J.YOUN
MATERIAL		CHECKED BY	E.H.KIM
		DRAWN BY	I.C.KIM
FINISH		SCALE 2.5/1	UNIT mm

KJ COMTECH
KJ COMTECH CO.,LTD.
RF & MICROWAVE TECHNOLOGY
Tel : 82-32-347-8015
Fax : 82-32-347-8017

TITLE: BNC50-JC-H4-316DS

A4 | DWG NO. CN02278-7/1 | REVISION I R | SHEET 1 of 1