WORK / ST										
ST(Old)										
ST(Rev)										

REVISION

REV	DESCRIPTION	DATE

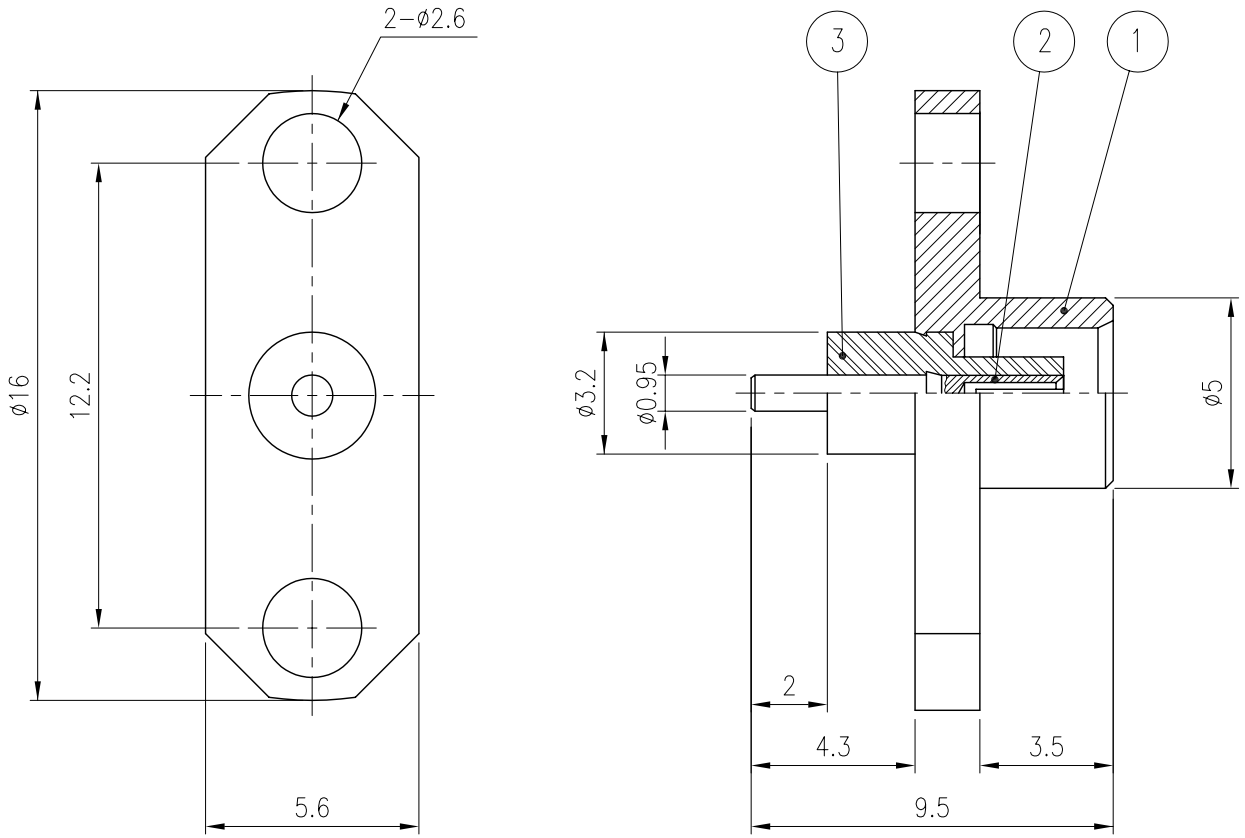

NO.	DESCRIPTION	Q'TY	MATERIAL	PLATING	REMARKS
3	INSULATOR	1	PTFE		DIN01373-N/1
2	CONTACT	1	Beryllium copper	Gold Plated	DCT01671-5/1
1	BODY	1	BRASS	Gold Plated	DBD02144-5/1

CUSTOMER	DATE 2008. 9. 5.	KJ COMTECH CO.,LTD.	RF & MICROWAVE TECHNOLOGY Tel : 82-32-347-8015 Fax : 82-32-347-8017
	APPROVED BY		
CUSTOMER CODE	CHECKED BY	TITLE	MCX50-J-H2-R
	DRAWN BY		
TOLERANCES .* ±0.1 .** ±0.05	SCALE 3/1 / UNIT mm / WEIGHT —	A4	DWG NO. CN02159-7/1
			OLD CODE.