REVISION				
REV	DESCRIPTION	DRAWN	APPR	DATE
IR	Initial Registration	S.Y.EUN	I.C.KIM	2021.08.27.

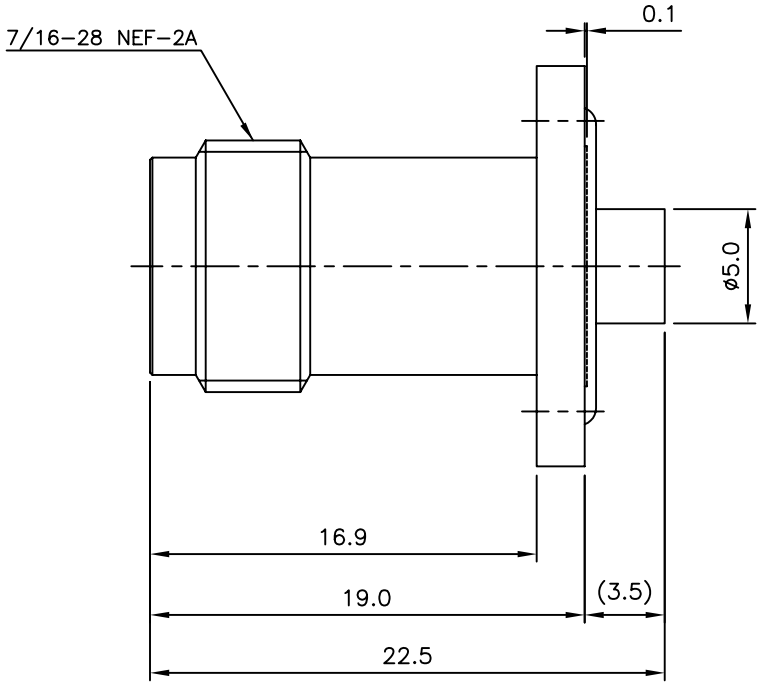

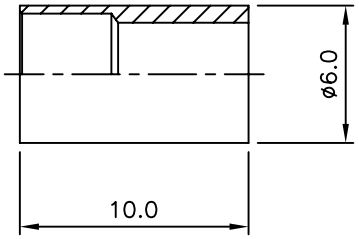

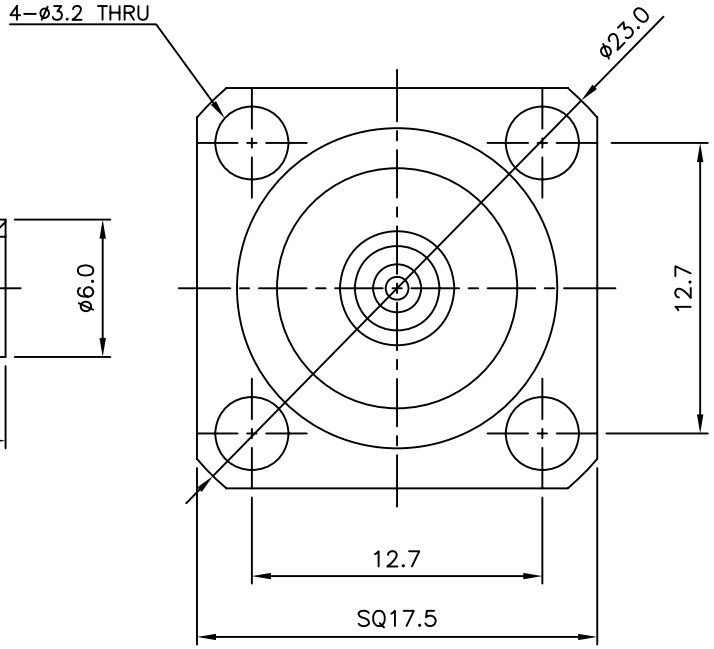

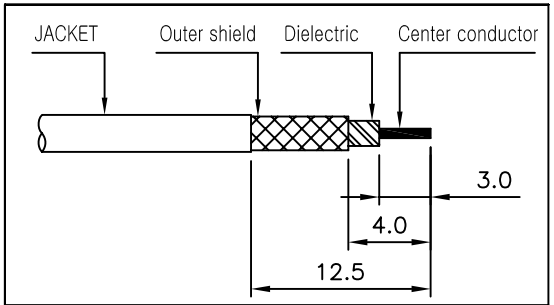

CABLE STRIP

NO.	DESCRIPTION	Q'TY	MATERIAL	PLATING	CODE
6	FERRULE	1	MBsBD C3604BD-F	Nickel Plated	DFE00162-5/1
5	RING	1	MBsBD C3604BD-F	Nickel Plated	DSR00051-5/1
4	INSULATOR	1	TEFLON		DIN00465-N/1
3	GASKET	1	SILICONE RUB	RED	DGK00032-N/1
2	CONTACT	1	BeCu C17300	Gold Plated	DCT01655-5/1
1	BODY	1	MBsBD C3604BD-F	Nickel Plated	DBD02130-5/2

TOLERANCE	Decimal ±0.1	DATE	2021. 08. 27.
	Angle ±1°	APPROVED BY	I.C.KIM
		CHECKED BY	
MATERIAL	———	DRAWN BY	S.Y.EUN
FINISH	———	SCALE 3/1	UNIT mm

KJ COMTECH
KJ COMTECH CO.,LTD.
RF & MICROWAVE TECHNOLOGY
Tel : 82-32-347-8015
Fax : 82-32-347-8017

TITLE
TNC50 CABLE JS-4H 141MF

A4 | DWG NO. CN02146-7/3 | REVISION I R | SHEET 1 of 1