REVISION				
REV	DESCRIPTION	DRAWN	APPR	DATE
IR	Initial Registration		I.C.KIM	2023.06.09.

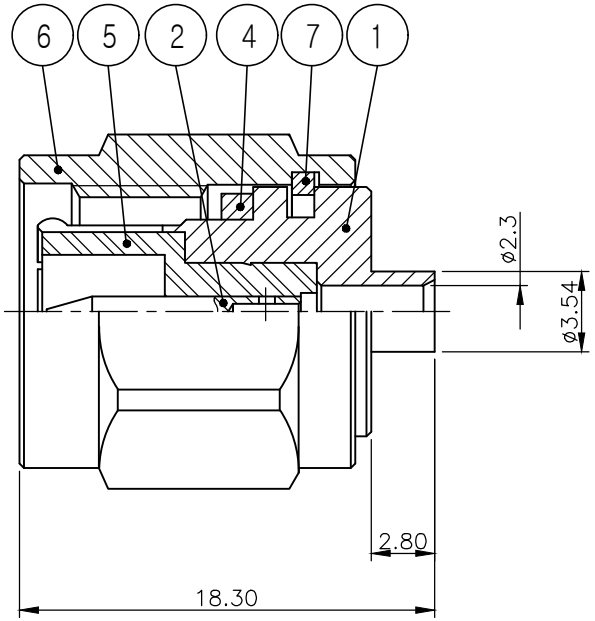

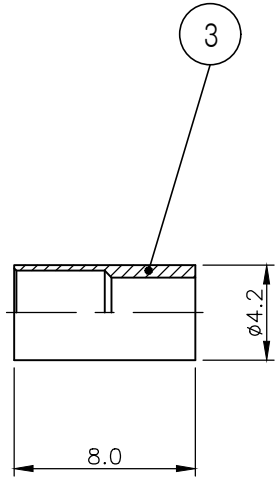

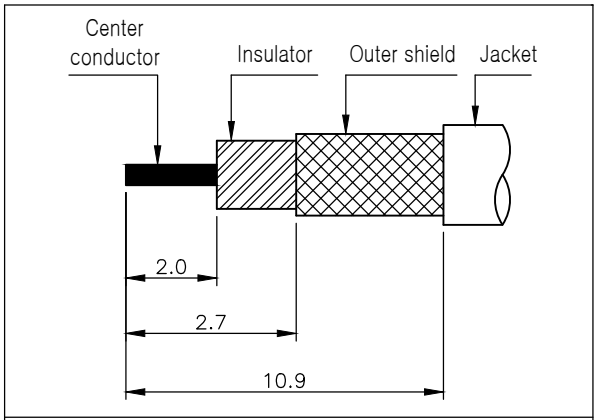

CABLE STRIP

NO.	DESCRIPTION	Q'TY	MATERIAL	PLATING	CODE
7	SPRING RING	1	SUS	Passivated	DSR00024-5/1
6	COUPLING CAP	1	MBsBD C3604BD-F	Nickel Plated	DCU00135-5/6
5	INSULATOR	1	TEFLON		DIN03121-N/3
4	GASKET	1	SILICONE RUB		DGK00008-N/1
3	FERRULE	1	MBsBD C3604BD-F	Nickel Plated	DFE00161-5/1
2	CONTACT	1	MBsBD C3604BD-F	Gold Plated	DCT04108-5/1
1	BODY	1	MBsBD C3604BD-F	Nickel Plated	DBD04603-5/1

TOLERANCE	Decimal ±0.2	DATE	2023. 06. 09.
	Angle ±1°	APPROVED BY	I.C.KIM
MATERIAL	———	CHECKED BY	
		DRAWN BY	
FINISH	———	SCALE 3/1	UNIT mm

KJ COMTECH
KJ COMTECH CO.,LTD.
RF & MICROWAVE TECHNOLOGY
Tel : 82-32-347-8015
Fax : 82-32-347-8017

TITLE: TNC50 CABLE PS 85MF

A4 | DWG NO. CN02145-7/D | REVISION I R | SHEET 1 of 1