WORK / ST										
ST(Old)										
ST(Rev)										

REVISION

REV	DESCRIPTION	DATE

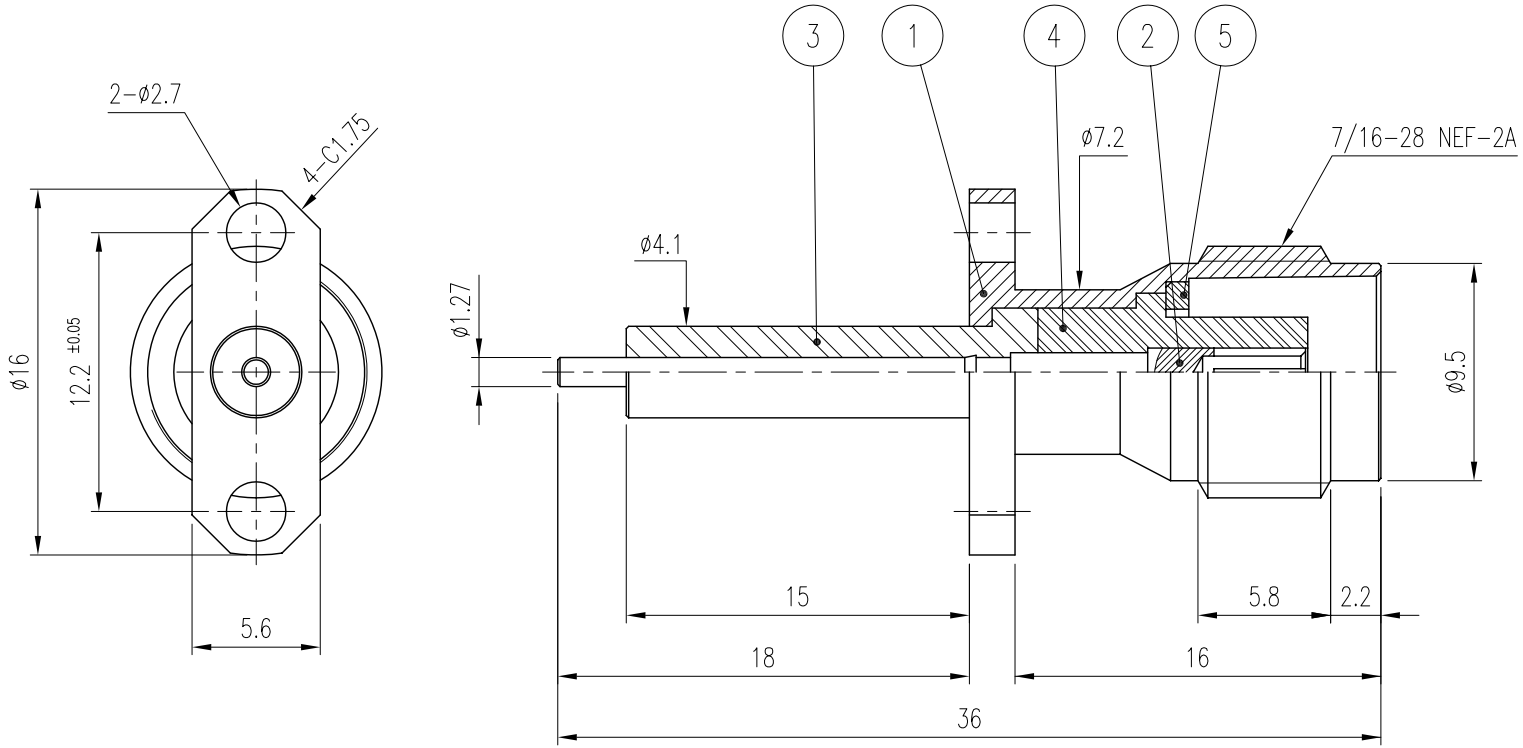

NO.	DESCRIPTION	Q'TY	MATERIAL	PLATING	REMARKS
5	COVER	1	BRASS	Nickel Plated	DSR00051-5/1 (L7009)
4	INSULATOR	1	PTFE		DIN01357-N/1
3	INSULATOR	1	PTFE		DIN01356-N/1
2	CONTACT	1	Beryllium copper	Gold Plated	DCT01637-5/1
1	BODY	1	BRASS	Nickel Plated	DBD02116-5/1

CUSTOMER	DATE 2008. 8. 7.			
	APPROVED BY			
CUSTOMER CODE	CHECKED BY			
	DRAWN BY			
TOLERANCES .* ±0.1 .** ±0.05	SCALE 3/1	UNIT mm	WEIGHT —	A4

KJ COMTECH
KJ COMTECH CO.,LTD.

RF & MICROWAVE TECHNOLOGY
Tel : 82-32-347-8015
Fax : 82-32-347-8017

TITLE: TNC50-J-H2-R VER.0

DWG NO. CN02097-7/1

OLD CODE.