REVISION		
REV	DESCRIPTION	DATE
IR	최초 개정	2008. 05. 15.
A	업체요청[설변처리No.연구200806-0002](다리폭 사각->삼각, 너트,와셔 추가)	2008. 06. 03.
B	업체요청[설변처리No.연구200903-0043](다리리드 길이 변경)	2009. 03. 26.

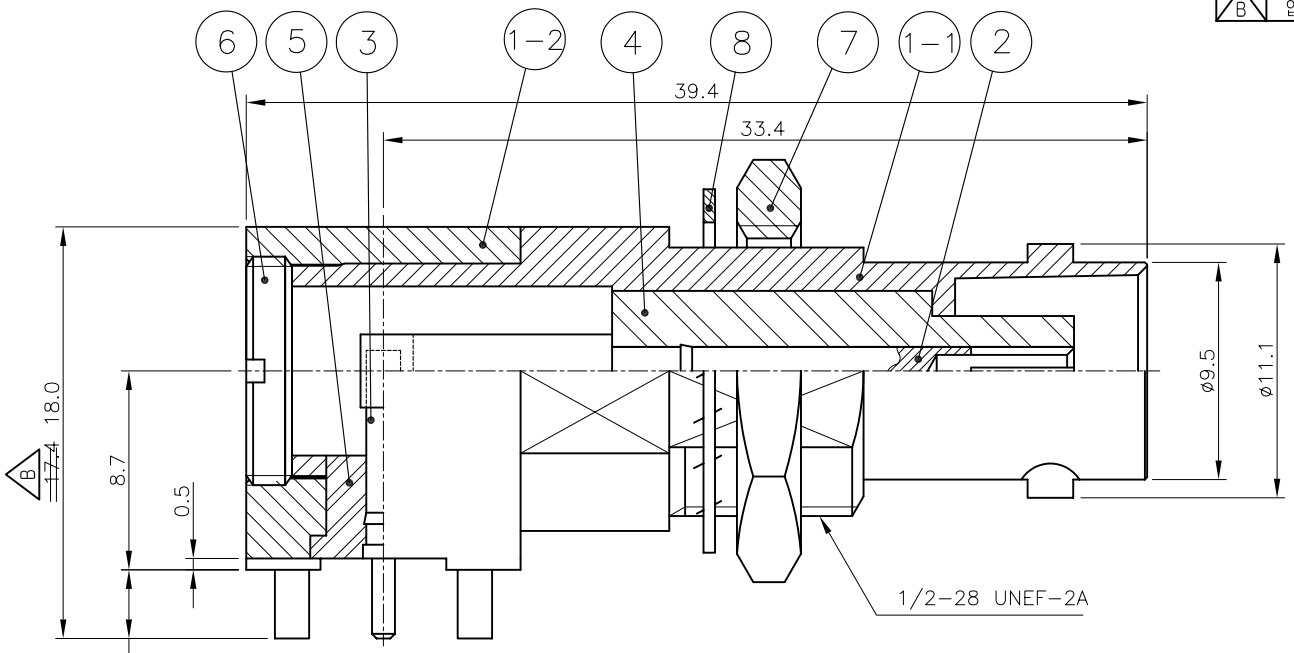

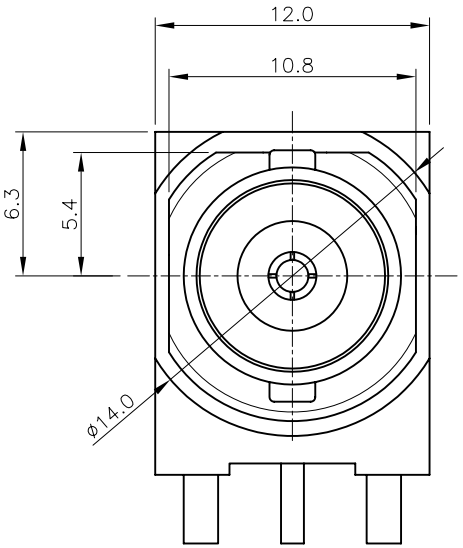

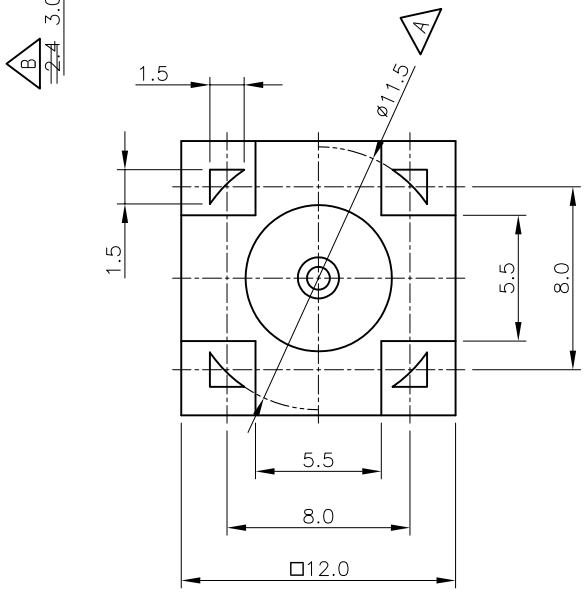

	NO.	DESCRIPTION	Q'TY	MATERIAL	PLATING	CODE	
A	8	WASHER	1	MBsBD	Nickel Plate	DWA00022-5/1 (Q6008)	
A	7	NUT	1	MBsBD	Nickel Plate	DNT00020-5/1 (N6002)	
A	6	COVER	1	MBsBD	Nickel Plate	DCS00033-5/1 ~~DCS00032-5/1~~	
	5	INSULATOR	1	TEFLON	White	DIN01285-N/1	
	4	INSULATOR	1	TEFLON	White	DIN01284-N/1	
B	3	CONTACT	1	MBsBD	Gold Plate	DCT01943-5/1 ~~DCT01513-5/1~~	
A	2	CONTACT	1	BeCu	Gold Plate	DCT01565-5/1 ~~DCT01512-5/1~~	
B A	1-2	사각 BODY	1	MBsBD	Nickel Plate	DBB00222-5/1 ~~DBB00157-5/1~~	DBD02429-3/1 ~~DBD02040-3/1~~ ~~DBD01989-3/1~~
	1-1	원형 BODY	1	MBsBD	Nickel Plate	~~DBB00147-5/1~~	DBD01987-3/1

TOLERANCE	Decimal ±0.1	DATE	2009. 03. 26.
	Angle ±1°	APPROVED BY	S.J.YOUN
		CHECKED BY	I.C.KIM
MATERIAL	-	DRAWN BY	E.H.KIM
FINISH	-	SCALE 3/1	UNIT mm

KJ COMTECH
KJ COMTECH CO.,LTD.
RF & MICROWAVE TECHNOLOGY
Tel : 82-32-347-8015
Fax : 82-32-347-8017

TITLE: BNC50-LJ-4R-R

A4 | DWG NO. CN01999-7/3 | REVISION I R | SHEET 1 of 1