WORK / ST										
ST(Old)										
ST(Rev)										

REVISION

REV	DESCRIPTION	DATE

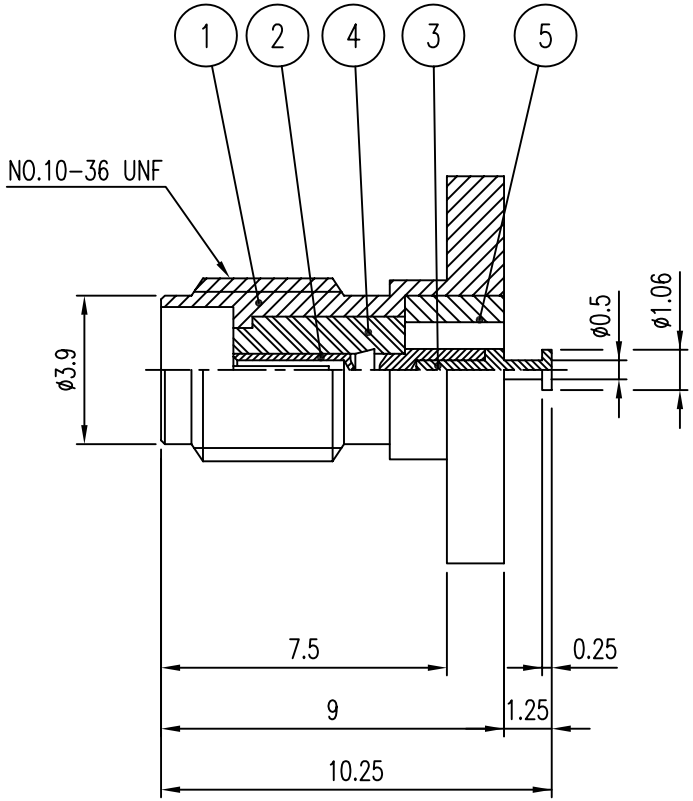

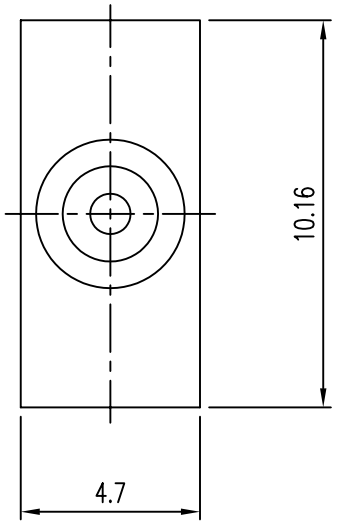

NO.	DESCRIPTION	Q'TY	MATERIAL	PLATING	REMARKS
5	RING	1	BRASS	Gold Plated	DSR01063-5/1
4	INSULATOR	1	PTFE		DIN01280-N/1
3	CONTACT	1	BRASS	Gold Plated	DCT01507-5/1
2	CONTACT	1	Beryllium copper	Gold Plated	DCT01506-5/1
1	BODY	1	BRASS	Gold Plated	DBD01984-5/1

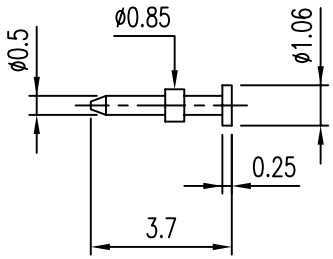

SSMA TURRET

CUSTOMER	DATE 2008. 5. 8.		KJ COMTECH CO.,LTD. RF & MICROWAVE TECHNOLOGY Tel : 82-32-347-8015 Fax : 82-32-347-8017
	APPROVED BY		
CUSTOMER CODE	CHECKED BY		TITLE SSMA JACK SURFACE LAUNCH
	DRAWN BY		
TOLERANCES .* ±0.1 .** ±0.05	SCALE 3/1	UNIT mm	WEIGHT —
A4	DWG NO. CN01994-7/1		
	OLD CODE.		