REVISION				
REV	DESCRIPTION	DRAWN	APPR	DATE
IR	Initial Registration		C.Y.H.	2011.02.09.

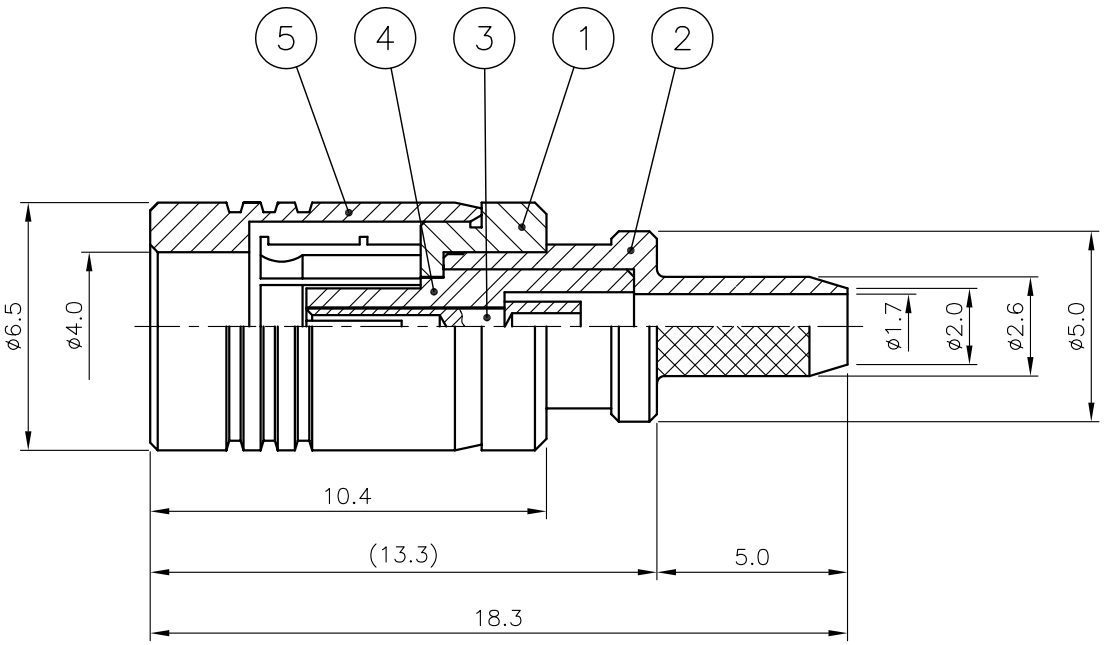

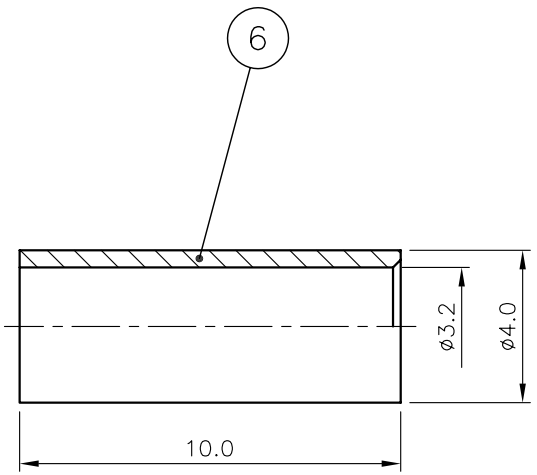

NO.	DESCRIPTION	Q'TY	MATERIAL	PLATING	CODE
6	FERRULE	1	MBsBD	Gold Plate	DFE00034-5/2
5	CAP	1	MBsBD	Gold Plate	DCU02178-5/1
4	INSULATOR	1	TEFLON		DIN00346-N/1
3	CONTACT	1	BeCu	Gold Plate	DCT00348-5/1
2	BODY	1	MBsBD	Gold Plate	DBD00482-5/2
1	BODY	1	MBsBD	Gold Plate	DBD00433-5/1

TOLERANCE	Decimal ±0.1	DATE	2011. 02. 09.
	Angle ±1°	APPROVED BY	Y.H.CHOI
MATERIAL	———	CHECKED BY	
		DRAWN BY	
FINISH	———	SCALE 5/1	UNIT mm

KJ COMTECH
KJ COMTECH CO.,LTD.
RF & MICROWAVE TECHNOLOGY
Tel : 82-32-347-8015
Fax : 82-32-347-8017

TITLE: SMB50 CABLE PS RG316

A4

DWG NO. CN01736-7/2

REVISION I R

SHEET 1 of 1