WORK / ST									
ST(Old)									
ST(Rev)									

REVISION

REV	DESCRIPTION	DATE

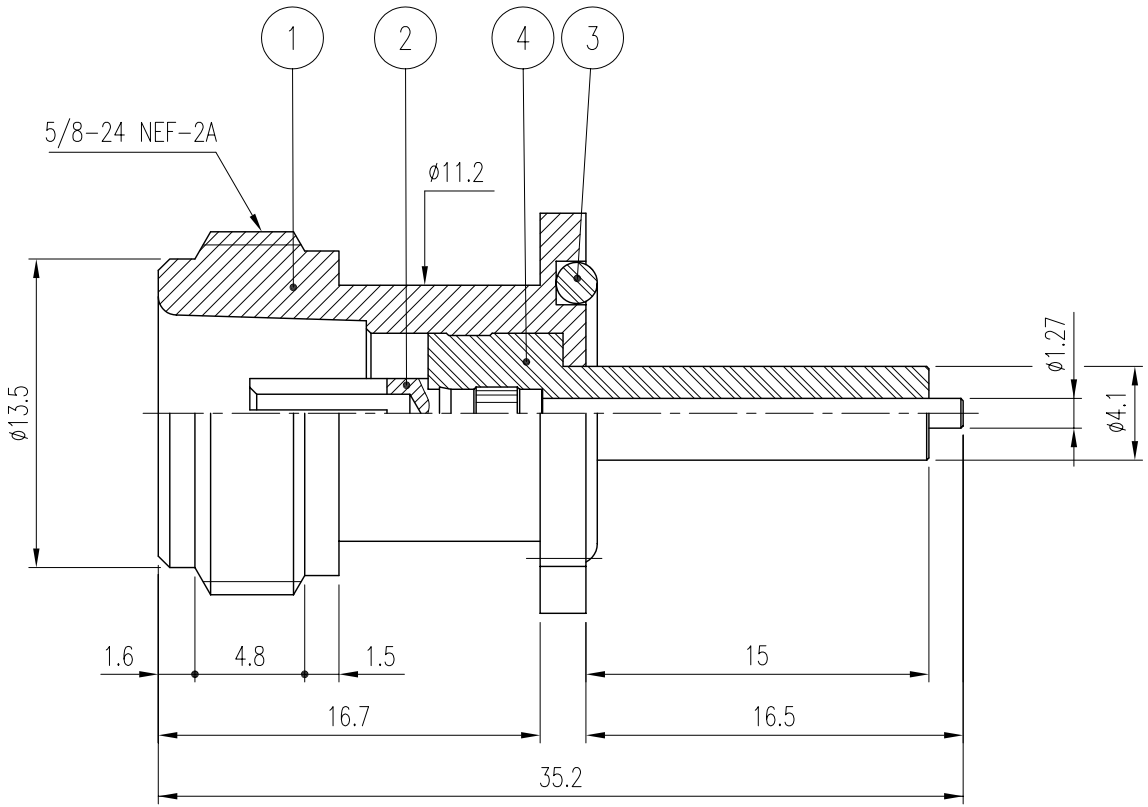

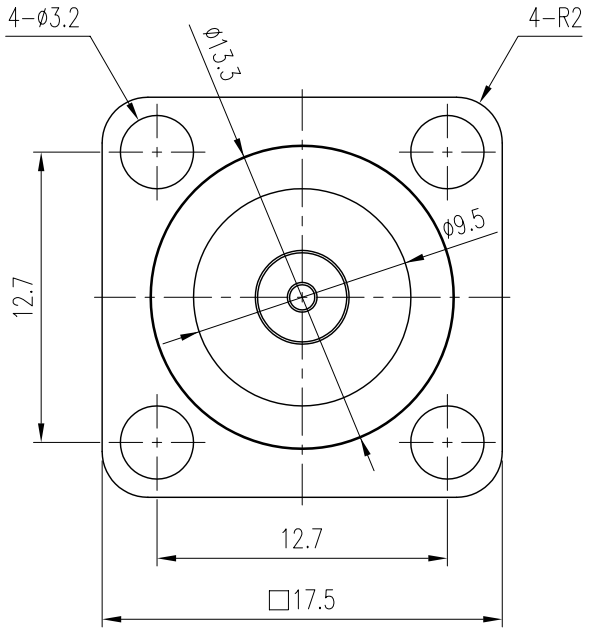

NO.	DESCRIPTION	Q'TY	MATERIAL	PLATING	REMARKS
4	INSULATOR	1	PTFE		DIN01275-N/1
3	GASKET	1	SILICONE RUB		DGK00030-N/1
2	CONTACT	1	Beryllium copper	Gold Plated	DCT01499-5/1
1	BODY	1	BRASS	Nickel Plated	DBD01973-5/1

CUSTOMER	DATE 2007. 5. 10.	KJ COMTECH CO.,LTD.	RF & MICROWAVE TECHNOLOGY Tel : 82-32-347-8015 Fax : 82-32-347-8017
	APPROVED BY		
CUSTOMER CODE	CHECKED BY	TITLE N50-J-H4-R VER.0	
	DRAWN BY		
TOLERANCES .* ±0.1 .** ±0.05	SCALE 4/1 / UNIT mm / WEIGHT —	A4	DWG NO. CN01380-7/1
			SHEET K345-411-009