REVISION				
REV	DESCRIPTION	DRAWN	APPR	DATE
IR	Initial Registration	I.C.KIM		2000.11.07.
1	[설변처리 No.2007-140] 업체요청		S.J.YOUN	2007.08.21.
2	[설변처리 No.201612-0003] BODY 내부 HOOK 형상 추가	G.Y.KIM	I.C.KIM	2016.12.05.

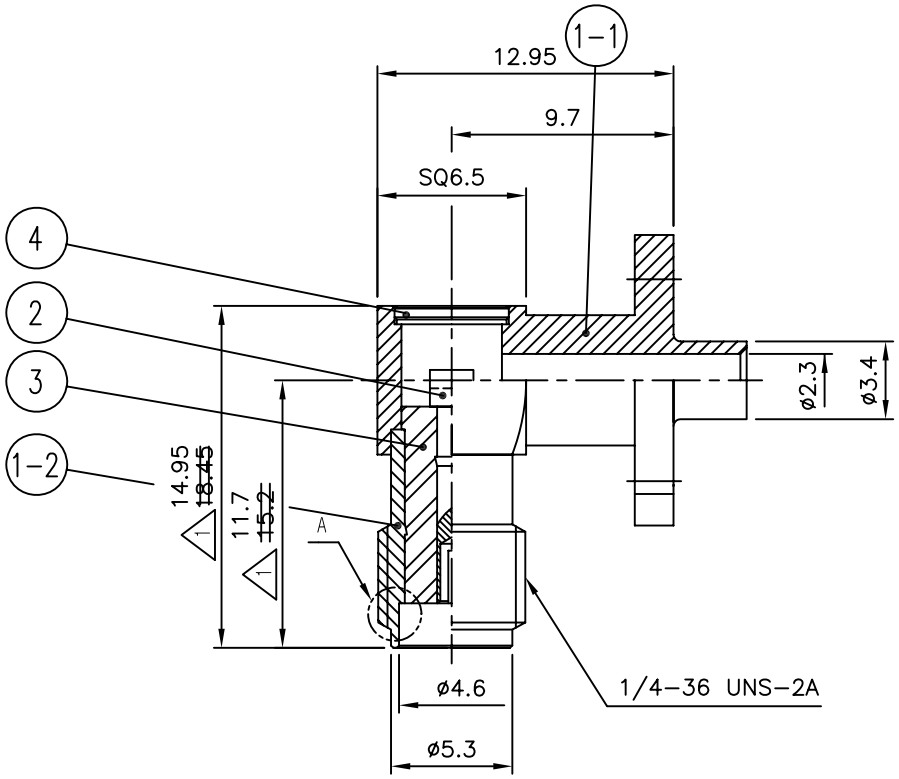

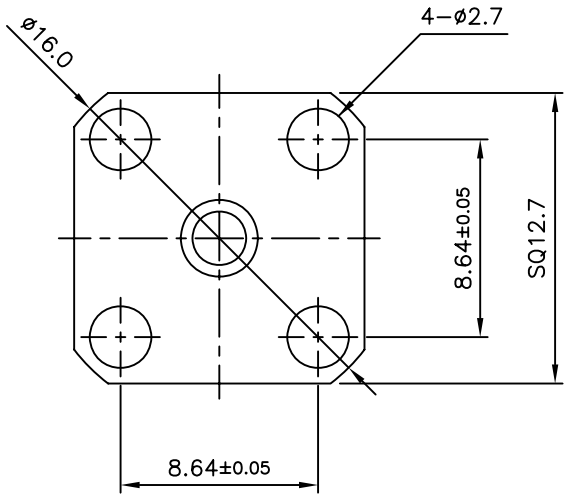

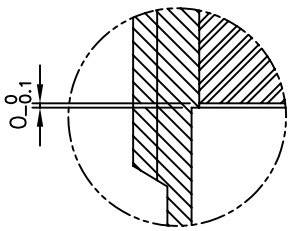

A부 확대도

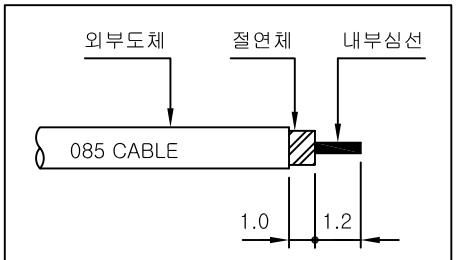

CABLE ASS'Y 탈피도

NO.		DESCRIPTION	Q'TY	MATERIAL	PLATING	CODE	
4		COVER	1	MBsBD C3604BD-F	Gold Plate	DCO00032-5/1	
3		INSULATOR	1	TEFLON		DIN01189-N/1	
2		CONTACT	1	BeCu C17300	Gold Plate	DCT01397-5/1	
1	2	BODY (B)	1	MBsBD C3604BD-F	Gold Plate	DBB00023-5/1	DBD01885-1/1
1	1	BODY (A)	1	MBsBD C3604BD-F	Gold Plate		DBD01799-3/1

TOLERANCE	Decimal ±0.1	DATE	2016. 12. 05.
	Angle ±1°	APPROVED BY	I.C.KIM
MATERIAL	-	CHECKED BY	C.K.KIM
		DRAWN BY	G.Y.KIM
FINISH	-	SCALE 3/1	UNIT mm

KJ COMTECH
KJ COMTECH CO.,LTD.
RF & MICROWAVE TECHNOLOGY
Tel : 82-32-347-8015
Fax : 82-32-347-8017

TITLE: SMA50 CABLE PL 4H 085

A4 | DWG NO. CN01236-7/1 | REVISION 2 | SHEET 1 of 1