WORK / ST										
ST(Old)										
ST(Rev)										

REVISION

REV	DESCRIPTION	DATE

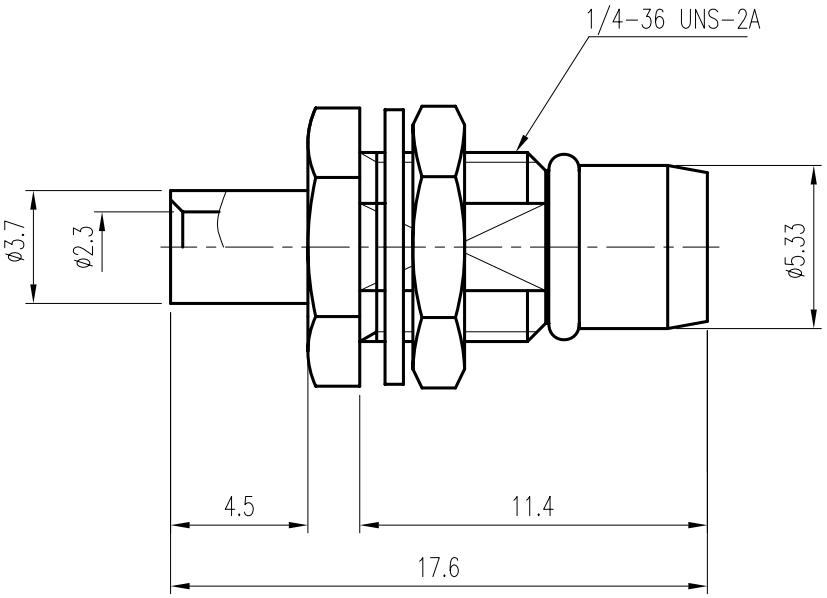

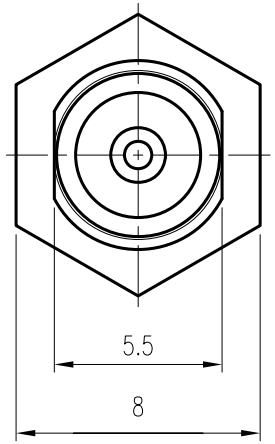

NO.	DESCRIPTION	Q'TY	MATERIAL	PLATING	REMARKS
6	WASHER	1	SK-5	Nickel Plated	DWA00003-5/1 (Q2003)
5	NUT	1	BRASS	Nickel Plated	DNT00025-5/5
4	GASKET	1	SILICONE RUB	RED	DGK00017-N/2
3	INSULATOR	1	PTFE		DIN00126-N/1 (H2109)
2	CONTACT	1	Beryllium copper	Gold Plated (1㎛)	DCT01415-5/1 (EW001)
1	BODY	1	Stainless steel	Nickel Plated (3㎛)	DBD01815-5/1 (DW002)

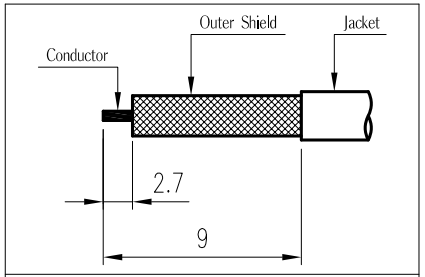

CABLE STRIPPING

주 기

1. 도금 사양
   - Nickel Plate : 3㎛ 이상 (BODY)
   - Gold Plate : 1㎛ 이상 (CONTACT)

CUSTOMER	DATE 2007. 6. 26.		KJ COMTECH CO.,LTD.	RF & MICROWAVE TECHNOLOGY Tel : 82-32-347-8015 Fax : 82-32-347-8017	
	APPROVED BY				
CUSTOMER CODE	CHECKED BY		TITLE BMA-BP-S-085		
	DRAWN BY				
TOLERANCES .* ±0.1 .** ±0.05	SCALE 4/1	UNIT mm	WEIGHT —	A4	DWG NO. CN01232-7/1 K328-314-001