REVISION				
REV	DESCRIPTION	DRAWN	APPR	DATE
IR	Initial Registration			2008.01.10.
1	[설변처리No.201201-0007] (조립성으로 인해 GASKET 변경 및 BODY 구조 변경)	I.C.KIM	J.H.YOUN	2012.01.25.
2	[설변No.202201-0009] PIPE 압착 후 BURR 발생 개선으로 인한 PIPE 변경	S.Y.EUN	S.H.KIM	2022.01.18.

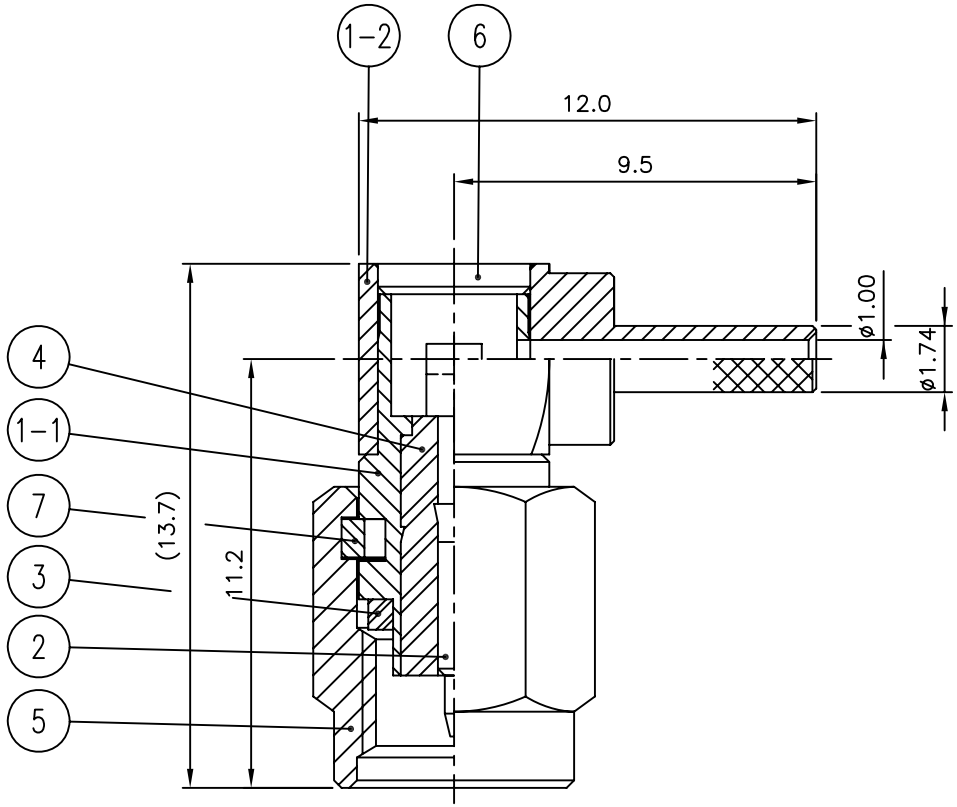

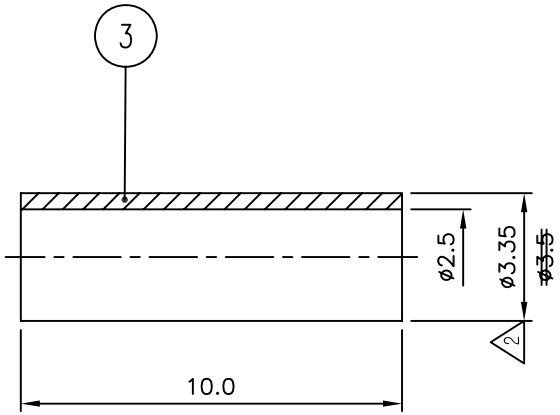

	NO.	DESCRIPTION	Q'TY	MATERIAL	PLATING	CODE
	8	SPRING RING	1	BeCu	Gold Plate	DSR00003-5/1
	7	COVER	1	MBsBD	Gold Plate	DCO00015-5/1
	6	CAP	1	MBsBD	Gold Plate	DCU00001-5/1
	5	INSULATOR	1	TEFLON		DIN01335-N/1
1	4	GASKET	1	SILICONE RUB		DGK00003-N/2 ~~DGK00003-N/1~~
2	3	FERRULE	1	MBsBD	Nickel Plate ~~Gold Plate~~	DFE00018-5/2 ~~DFE00010-5/1~~
	2	CONTACT	1	MBsBD	Gold Plate	DCT00295-5/1
1	1 1-2	BODY	1	MBsBD	Gold Plate	DBB00020-5/2 DBD03011-3/1 ~~DBD01754-3/1~~
	1 1-1	BODY	1	MBsBD	Gold Plate	~~DBB00020-5/1~~ DBD02088-3/2 ~~DBD00101-3/1~~

TOLERANCE	Decimal ±0.1	DATE	2022. 01. 18.
	Angle ±1°	APPROVED BY	S.H.KIM
		CHECKED BY	
MATERIAL		DRAWN BY	S.Y.EUN
FINISH		SCALE 5/1	UNIT mm

KJ COMTECH
KJ COMTECH CO.,LTD.
RF & MICROWAVE TECHNOLOGY
Tel : 82-32-347-8015
Fax : 82-32-347-8017

TITLE: SSMA50 CABLE PL 178

A4 | DWG NO. CN01181-7/2 | REVISION 2 | SHEET 1 of 1