REVISION				
REV	DESCRIPTION	DRAWN	APPR	DATE
IR	Initial Registration			2007.12.11.
1	[설계처리No.201212-0005] 조립성 개선 (BODY 낚시바늘 추가)	E.H.KIM	I.C.KIM	2012.12.14.

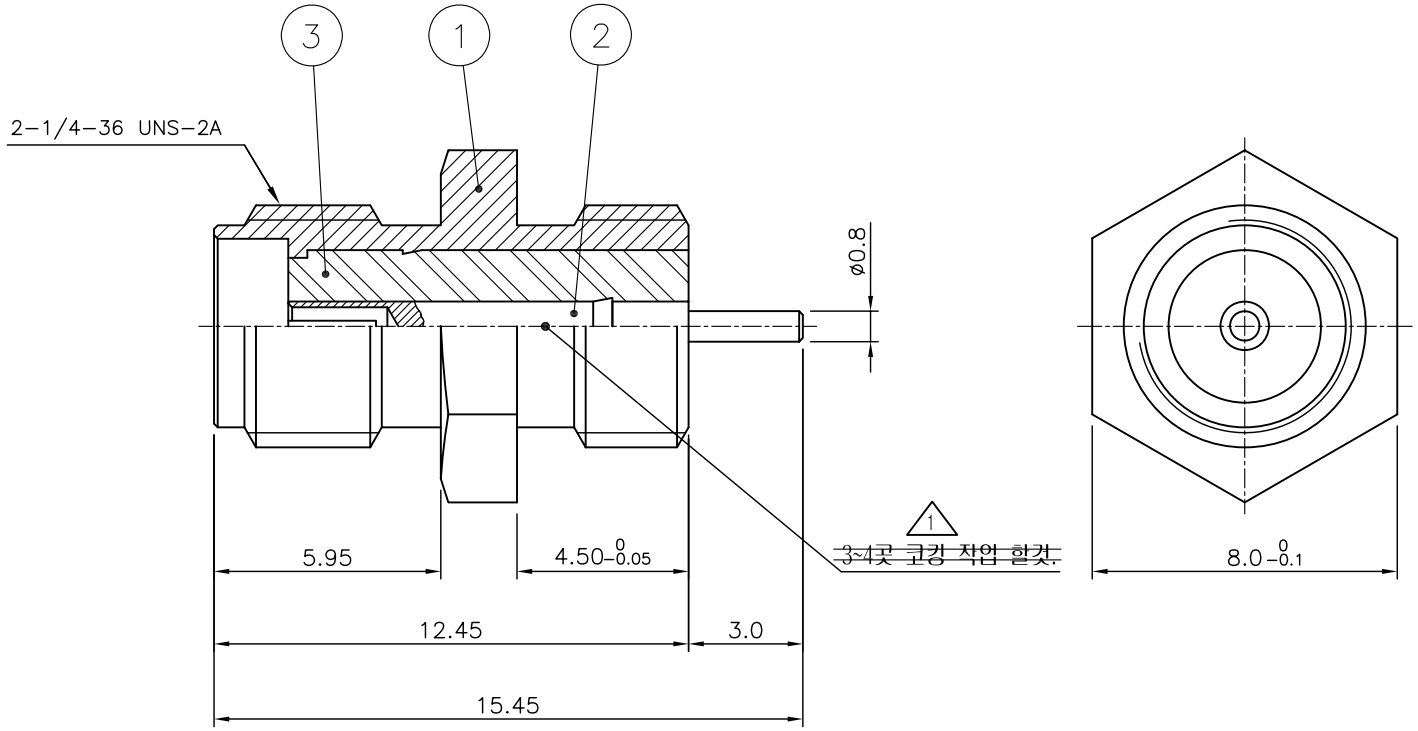

NO.	DESCRIPTION	Q'TY	MATERIAL	PLATING	CODE
3	INSULATOR	1	TEFLON	White	DIN00981-N/1
2	CONTACT	1	BeCu	Gold Plate	DCT01307-5/1
1	BODY	1	MBsBD	Gold Plate	DBD01674-5/1

TOLERANCE	Decimal ±0.1	DATE	2012. 12. 14.
	Angle ±1°	APPROVED BY	I.C.KIM
		CHECKED BY	
MATERIAL	-	DRAWN BY	E.H.KIM
FINISH	-	SCALE 5/1	UNIT mm

KJ COMTECH
KJ COMTECH CO.,LTD.
RF & MICROWAVE TECHNOLOGY
Tel : 82-32-347-8015
Fax : 82-32-347-8017

TITLE
SMA50 SOLDER END JB (F/F)

A4 | DWG NO. CN01116-7/1 | REVISION 1 | SHEET 1 of 1