ST \ 가공										
ST(기존)										
ST(개선)										

REVISION

REV	DESCRIPTION	DATE
1	COVER CODE CHANGE [REV NUBER-2006-019]	2006. 1. 24.

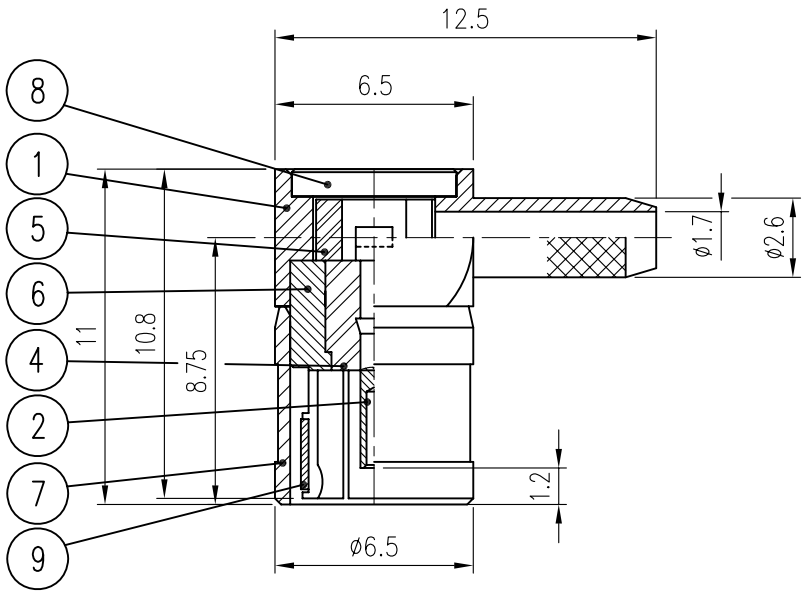

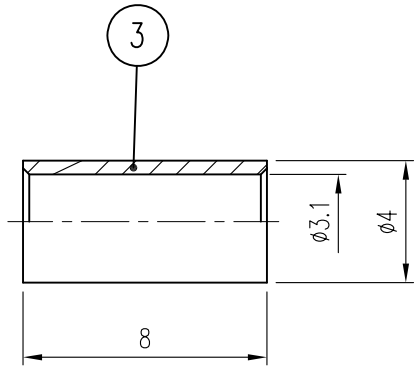

NO.	DESCRIPTION	Q'TY	MATERIAL	PLATING	REMARKS
9	SPRING RING	1	BeCu	Nickel Plate	DSR00006-5/1 (R3005)
8	COVER	1	MBsBD	Nickel Plate	DCO00026-5/1 (L3027) ~~L3012~~
7	CAP	1	MBsBD	Nickel Plate	DCU00028-5/1 (K3015)
6	JACK	1	MBsBD	Gold Plate	DJA00030-5/1 (J3024)
5	INSULATOR	1	TEFLON		DIN00924-N/1 (H3121)
4	INSULATOR	1	TEFLON		DIN00349-N/1 (H3114)
3	FERRULE	1	MBsBD	Nickel Plate	DFE00029-5/1 (F6412)
2	CONTACT	1	BeCu	Gold Plate(1.27μ)	DCT00369-5/1 (E3139)
1	BODY	1	MBsBD	Nickel Plate	DBD00453-5/1 (D3142)

CUSTOMER: 네덜란드 AMPHENOL	DATE: 2004. 10. 27.	KJ COMTECH CO.,LTD.	RF & MICROWAVE TECHNOLOGY Tel : 82-32-347-8015 Fax : 82-32-347-8017
CUSTOMER CODE	APPROVED BY		
	CHECKED BY	TITLE: SMB75-LPC-179 VER.1	
	DRAWN BY		
	SCALE: 4/1 / UNIT: mm / WEIGHT: —	A4	DWG NO. CN00980-7/1
			K315-141-077