ST \ 가공										
ST(기존)										
ST(개선)										

REVISION

REV	DESCRIPTION	DATE
1	ϕ4.7 => ϕ4.77 0 -0.03	2002. 10. 04.
2	업체요구에 의한 설변	2002. 10. 11.
3	조립성 향상(RING 삽입,JACK 재질변경)	2003. 12. 2.

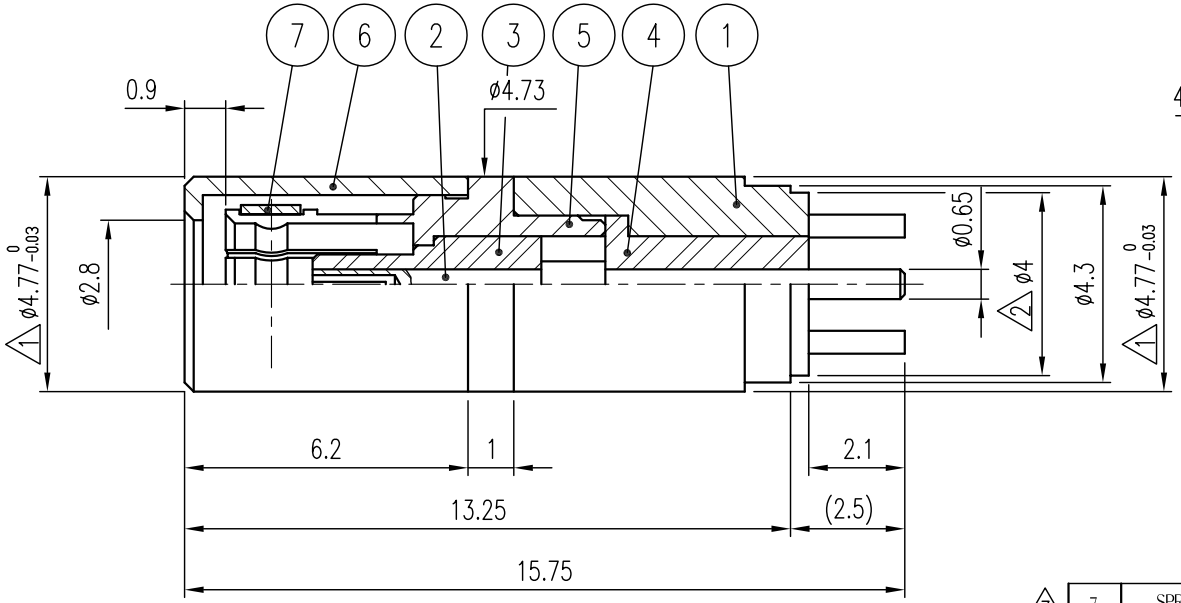

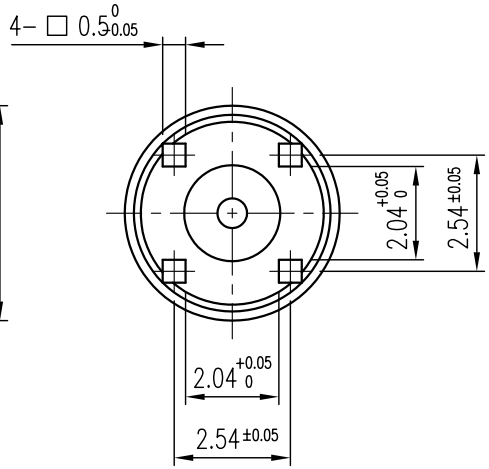

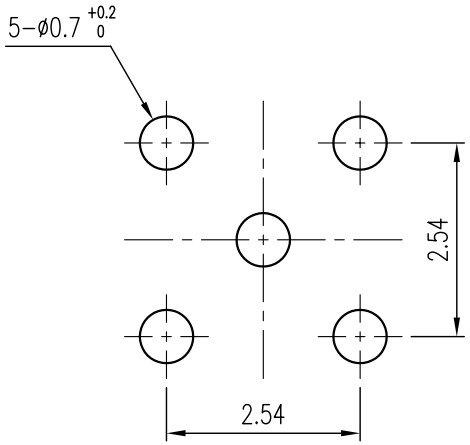

Montagebohuungen

Mounting Detail

	NO.	DESCRIPTION	Q'TY	MATERIAL	PLATING	REMARKS
3	7	SPRING RING	1	BeCu	Gold Plate	DSR01044-5/1
1	6	CAP	1	MBsBD	Gold Plate	DCU00010-5/1
3	5	JACK	1	MBsBD	Gold Plate	DJA00012-5/1
2	4	INSULATOR	1	TEFLON		DIN00270-N/1
	3	INSULATOR	1	TEFLON		DIN00269-N/1
	2	CONTACT	1	BeCu	Gold Plate	DCT00328-5/1
	1	BODY	1	MBsBD	Gold Plate	DBD00377-5/1

CUSTOMER: I M S	DATE: 2002. 4. 12.	KJ COMTECH CO.,LTD.	RF & MICROWAVE TECHNOLOGY Tel : 82-32-347-8015 Fax : 82-32-347-8017
	APPROVED BY		
CUSTOMER CODE: 1640.31.2510.00	CHECKED BY	TITLE: SSMB-PCB-MOUNT	
	DRAWN BY		
	SCALE: 6/1 / UNIT: mm / WEIGHT: —	A4	DWG NO. CN00871-7/1
			DEV NO K355-479-000