REVISION				
REV	DESCRIPTION	DRAWN	APPR	DATE
IR	Initial Registration	Y.H.CHOI	I.C.KIM	2005. 11. 22.
1	[설변No.201504-0006] BODY 표준화 치수 변경 및 JACK 코드 변경	H.J.LEE	I.C.KIM	2015. 04. 14.
2	[설변No.201806-0002] QMA 표준화 치수 변경	S.Y.EUN	I.C.KIM	2018. 06. 11.

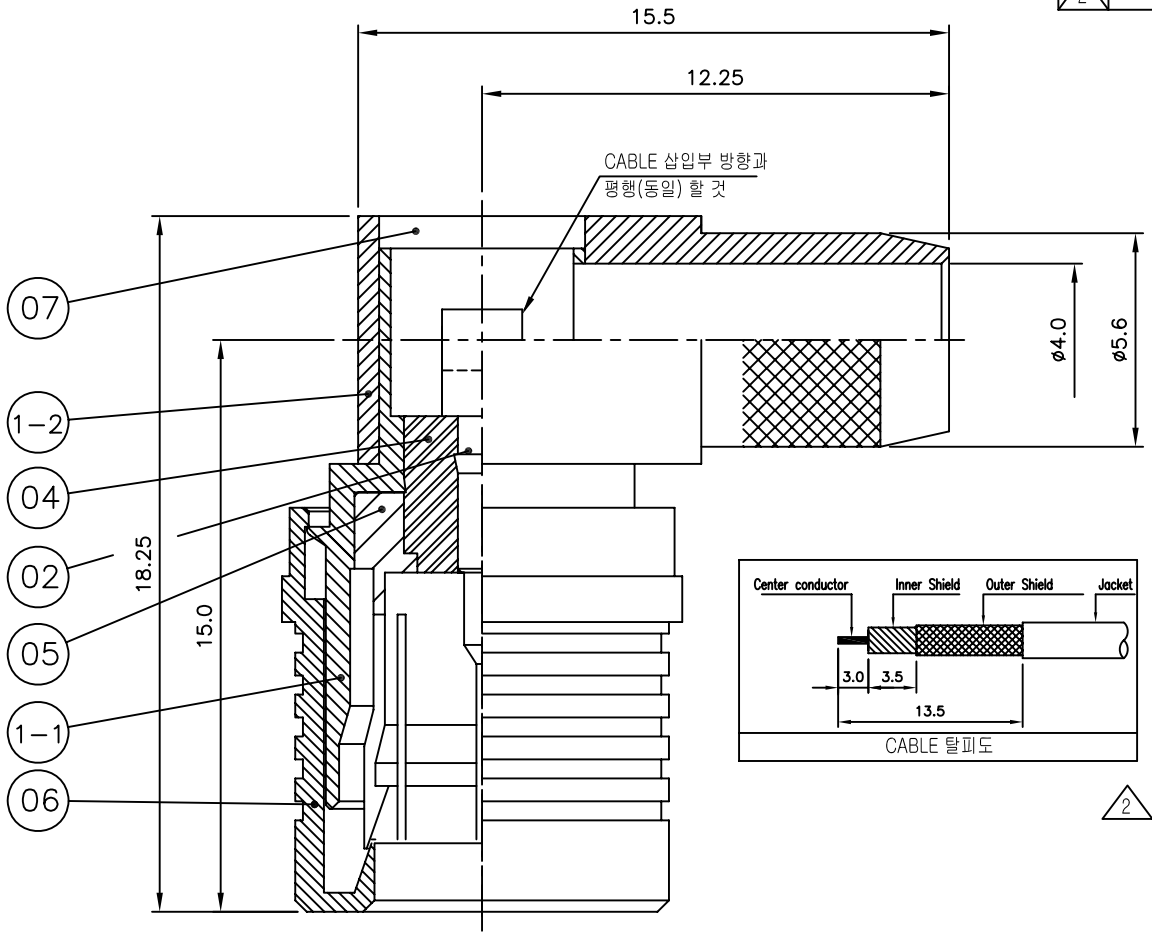

CABLE 탈피도

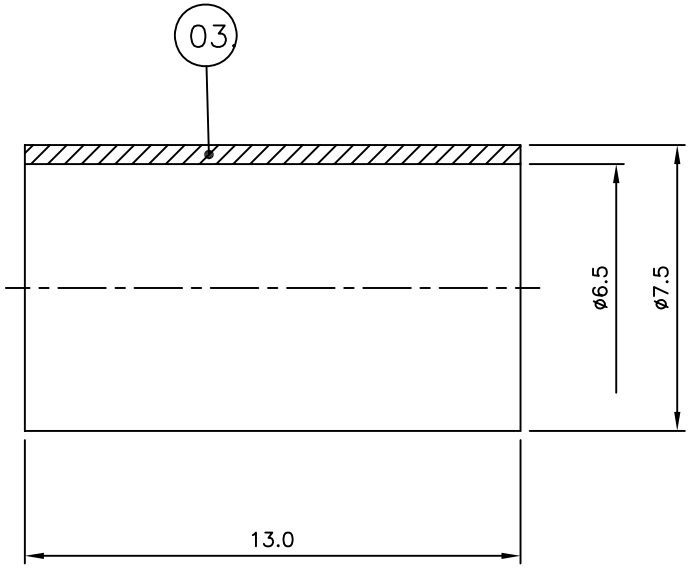

NO.		DESCRIPTION	Q'TY	MATERIAL	PLATING	CODE	
7		COVER	1	MBsBD	SUCO Plate	DCO00037-5/1	
6		CAP	1	MBsBD	SUCO Plate	DCU02169-5/1	
5		JACK	1	BeCu	SUCO Plate	DJA00209-5/4 ~~DJA00209-5/2~~	
4		INSULATOR	1	TEFLON		DIN01707-N/1	
3		FERRULE	1	MBsBD	Gold Plate	DFE00062-5/1	
2		CONTACT	1	MBsBD	Gold Plate	DCT00945-5/1	
1	1-2	BODY (B)	1	MBsBD	SUCO Plate	DBB00252-5/3	DBD01209-3/1
	1-1	BODY (A)	1	MBsBD	SUCO Plate		DBD01210-3/3

* 조립 주의 *

- CAP 조립시 JACK이 눌리지 않도록 HAND PRESS 및 AIR PRESS 조절하여 작업 할 것 (조립 가능한 최소거리 설정)
- COVER 조립시 CEQ00363-N/1 하 JIG 이용 조립 할 것

TOLERANCE	Decimal ±0.1	DATE	2018. 06. 11.
	Angle ±1°	APPROVED BY	I.C.KIM
		CHECKED BY	
MATERIAL	———	DRAWN BY	S.Y.EUN
FINISH	———	SCALE 5/1	UNIT mm

KJ COMTECH
KJ COMTECH CO.,LTD.
RF & MICROWAVE TECHNOLOGY
Tel : 82-32-347-8015
Fax : 82-32-347-8017

TITLE QMA50 CABLE LP LMR240

A4 DWG NO. CN00834-7/3

REVISION 2 SHEET 1 of 1