REVISION				
REV	DESCRIPTION	DRAWN	APPR	DATE
IR	Initial Registration	E.H.KIM	I.C.KIM	2014. 08. 12.
1	[설변No.201712-0008] 조립성 개선으로 인한 JACK 낚시바늘 추가 및 절연체 형상변경	S.Y.EUN	I.C.KIM	2017. 12. 22.
2	[설변No.202201-0009] PIPE 압착 후 BURR 발생 개선으로 인한 PIPE 변경	S.Y.EUN	S.H.KIM	2022. 01. 10.

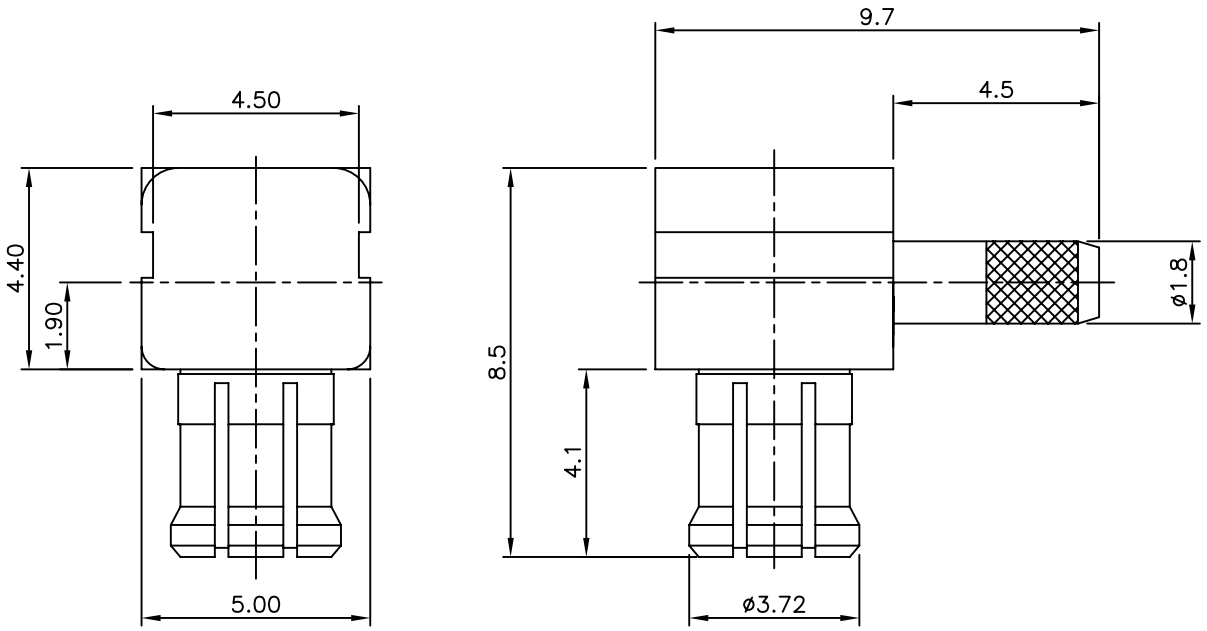

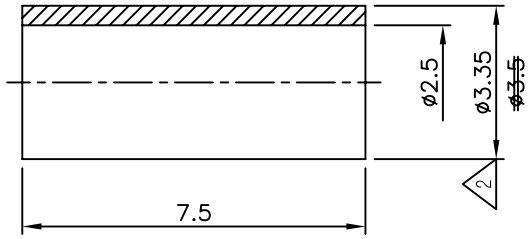

* 아이엔지테크 적용품

	NO.	DESCRIPTION	Q'TY	MATERIAL	PLATING	CODE	
	6	COVER	1	MBsBD	Gold Plate	DCO00013-5/1	
	5	INSULATOR	1	TEFLON		DIN00933-N/1	
1	4	INSULATOR	1	TEFLON		DIN02965-N/1 ~~DIN00065-N/1~~	
2	3	FERRULE	1	MBsBD	Nickel Plate ~~Gold Plate~~	DFE00018-5/3 ~~DFE00008-5/1~~	
	2	CONTACT	1	MBsBD	Gold Plate	DCT00069-5/1	
1	1 1-2	JACK BODY	1	BeCu	Gold Plate	DBB00396-3/1	DJA00204-5/1
	1 1-1	BODY	1	MBsBD	Gold Plate		DBD00035-5/1

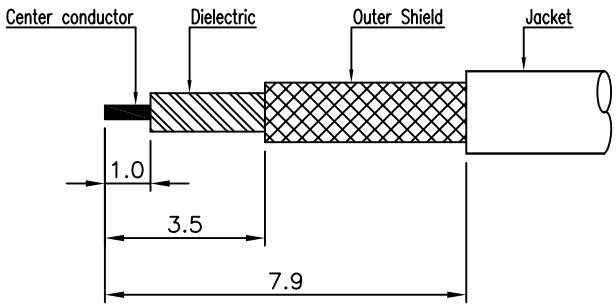

CABLE STRIPPING

TOLERANCE	Decimal ±0.1	DATE	2022. 01. 10.
	Angle ±1°	APPROVED BY	S.H.KIM
		CHECKED BY	
MATERIAL		DRAWN BY	S.Y.EUN
FINISH		SCALE 6/1	UNIT mm

KJ COMTECH
KJ COMTECH CO.,LTD.
RF & MICROWAVE TECHNOLOGY
Tel : 82-32-347-8015
Fax : 82-32-347-8017

TITLE
MCX50 CABLE PL RG178(50Ω)

A4 | DWG NO. CN00035-7/3 | REVISION 2 | SHEET 1 of 1