REVISION				
REV	DESCRIPTION	DRAWN	APPR	DATE
IR	Initial Registration	S.Y.EUN	I.C.KIM	2019.05.02.

* ELECTRICAL DATA
1. IMPEDANCE : 50ohm
2. FREQUENCY RANGE : DC~4GHz
3. VSWR : 1.25(Max)
4. INSERTION LOSS : 1.0dB(Max)

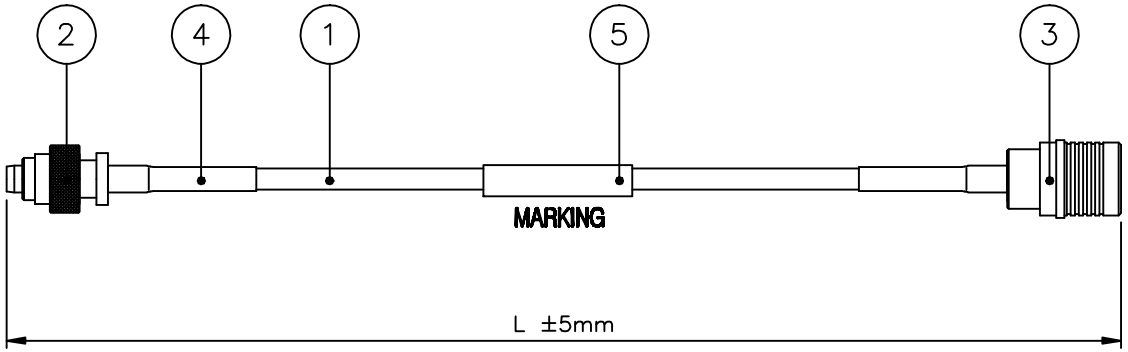

Notes

1. RoHS & Pb-FREE
2. CONNECTOR FINISHES
   2-1. SMBL PS----▶ ▷BODY : Nickel Plating
   CONTACT : Gold Plating
   CAP: Nickel Plating
   2-2. QMA50 PS---▶ ▷BODY : Nickel Plating
   CONTACT : Gold Plating
   CAP : Nickel Plate

MARKING

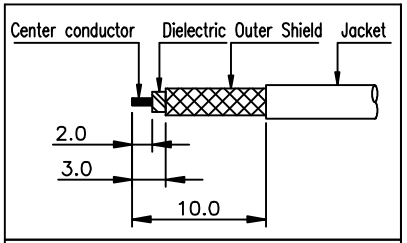

②번 CONNECTOR 탈피도

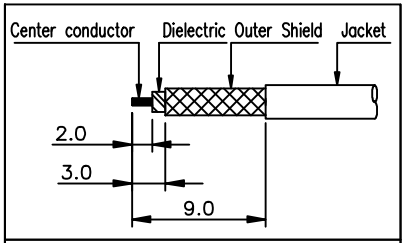

③번 CONNECTOR 탈피도

NO.	DESCRIPTION	Q'TY	VENDER	PART NO.	RAMARKS
5	MARKING TUBE	1	LS TUBE	ATU00212-N/1	Ø4-20 White
4	BONDING TUBE	2	LS TUBE	ATU00004-N/1	Ø4-20 Black
3	CONNECTOR	1	KJ COMTECH	CN03355-7/3	QMA50 PS
2	CONNECTOR	1	KJ COMTECH	CN02814-7/4	SMBL50 PS
1	COAXIAL CABLE		EXPANTEL	ACA00043-N/1	85MF(50Ω) - BULE (순수 CABLE 길이 130mm)

CUSTOMER

CUSTOMER CODE

CABLE LENGTH TOLERANCE
0 ~ 1000mm : +5, -0
1000 ~ 2000mm : +10, -0
2000 ~ 3000mm : +15, -0
3000 ~ 4000mm : +20, -0
4000 ~ 5000mm : +25, -0
5000 ~ : +10%

DATE	2019. 05. 02.
APPROVED BY	I.C.KIM
CHECKED BY	
DRAWN BY	S.Y.EUN
CHECKED BY	
SCALE	N/S
UNIT	mm

KJ COMTECH
KJ COMTECH CO.,LTD.
RF & MICROWAVE TECHNOLOGY
Tel : 82-62-947-6915
Fax : 82-62-947-6917

TITLE: CABLE ASS'Y

A4

DWG NO.	CF01374-7/1
DETAIL NO.	
REVISION	I R
SHEET	1 of 1