REVISION				
REV	DESCRIPTION	DRAWN	APPR	DATE
IR	Initial Registration	S.Y.EUN	I.C.KIM	2019.01.15.

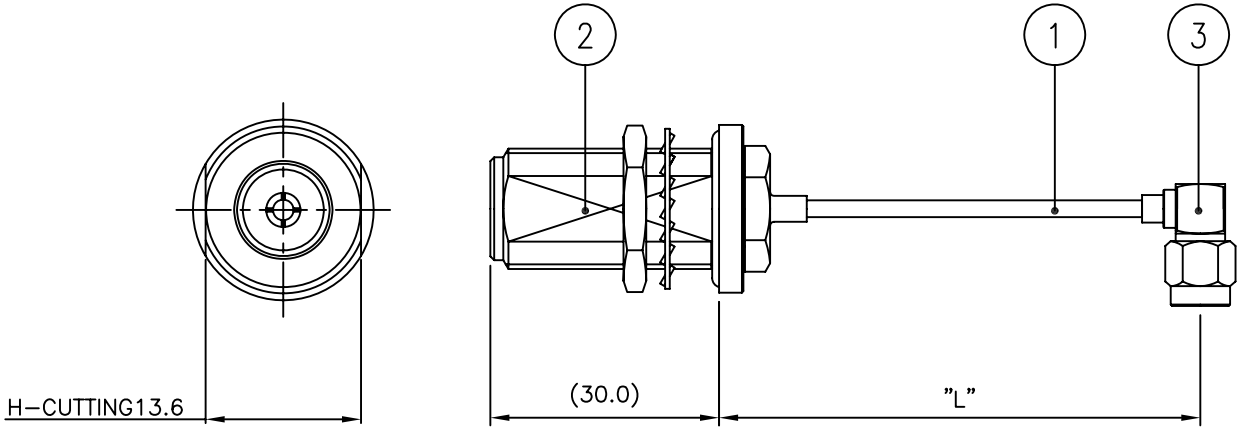

Notes

1. RoHS & Pb-FREE
2. CONNECTOR FINISHES
   2-1. SMA PL-------▶ ▷BODY : Gold Plating
   CONTACT : Gold Plating
   CAP : Nickel Plating
   2-2. N JB(F/N)----▶ ▷BODY : Nickel Plating
   CONTACT : Gold Plating
   NUT/WASHER : Nickel Plating

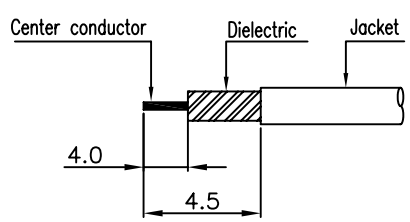

②번 CABLE 탈피도

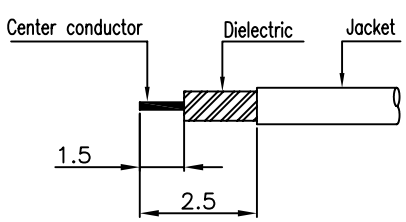

③번 CABLE 탈피도

NO.	DESCRIPTION	Q'TY	VENDER	PART NO.	RAMARKS
3	CONNECTOR	1	KJ COMTECH	CN02810-7/4	SMA50 PL
2	CONNECTOR	1	KJ COMTECH	CN02441-7/1	N50 JB(F/N)
1	COAXIAL CABLE		EXPANTEL	ACA00026-N/1	85TP(50Ω)

CUSTOMER

CUSTOMER CODE

CABLE LENGTH TOLERANCE
0 ~ 1000mm : +5, -0
1000 ~ 2000mm : +10, -0
2000 ~ 3000mm : +15, -0
3000 ~ 4000mm : +20, -0
4000 ~ 5000mm : +25, -0
5000 ~ : +10%

DATE	2019. 01. 15.
APPROVED BY	I.C.KIM
CHECKED BY	
DRAWN BY	S.Y.EUN
CHECKED BY	
SCALE N/S	UNIT mm

KJ COMTECH
KJ COMTECH CO.,LTD.
RF & MICROWAVE TECHNOLOGY
Tel : 82-32-347-8015
Fax : 82-32-347-8017

TITLE CABLE ASS'Y

A4

DWG NO.	CF01291-7/1
DETAIL NO.	
REVISION	I R
SHEET	1 of 1