REVISION				
REV	DESCRIPTION	DRAWN	APPR	DATE
IR	Initial Registration	S.Y.EUN	I.C.KIM	2021.03.11

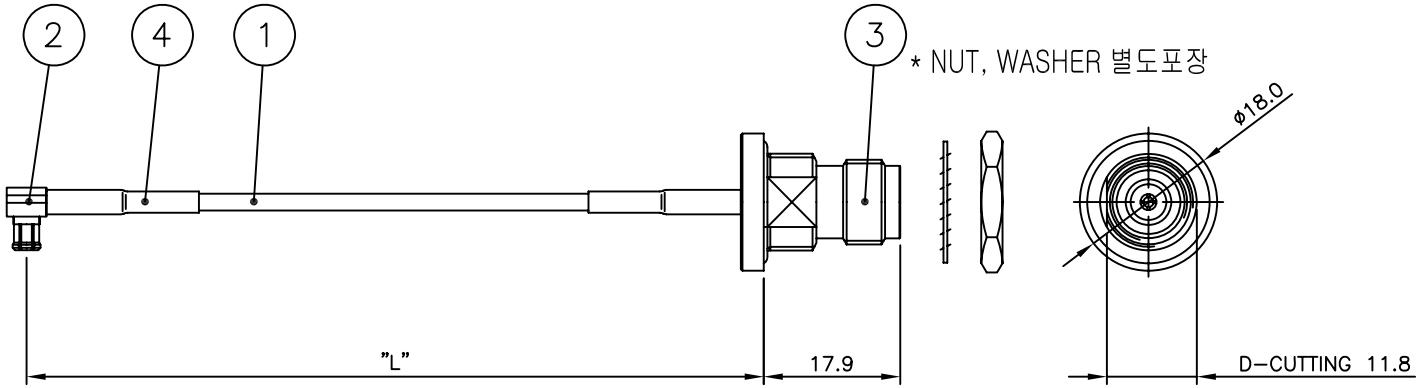

NO.	DESCRIPTION	Q'TY	VENDER	PART NO.	RAMARKS
4	SHRINK TUBE	2	LS TUBE	ATU00056-N/1	Ø4 x 20mm Black
3	CONNECTOR	1	KJ COMTECH	CN01481-7/8	TNC50-JB-RG316
2	CONNECTOR	1	KJ COMTECH	CN00714-7/1	MCX50-PL-RG316
1	CABLE ASS'Y		EXPANTEL	ACA00048-N/1	RG-316 (BROWN)

Notes

1. RoHS & Pb-FREE
2. CONNECTOR FINISHES
   - 2-1. MCX50-PL------▶ ▷ BODY : Gold Plating
     CONTACT : Gold Plating
     COVER : Gold Plating
   - 2-2. TNC50-JB------▶ ▷ BODY : Nickel Plating
     CONTACT : Gold Plating
     NUT : Nickel Plating
     WASHER : Nickel Plating

CUSTOMER

CUSTOMER CODE

CABLE LENGTH TOLERANCE
0 ~ 1000mm : +5, -0
1000 ~ 2000mm : +10, -0
2000 ~ 3000mm : +15, -0
3000 ~ 4000mm : +20, -0
4000 ~ 5000mm : +25, -0
5000 ~ : +10%

DATE	2021. 03. 11.
APPROVED BY	I.C.KIM
CHECKED BY	
DRAWN BY	S.Y.EUN
CHECKED BY	
SCALE	N/S
UNIT	mm

KJ COMTECH
KJ COMTECH CO.,LTD.
RF & MICROWAVE TECHNOLOGY
Tel : 82-32-347-8015
Fax : 82-32-347-8017

TITLE: CABLE ASS'Y

A4

DWG NO.	CF00957-7/2
DETAIL NO.	
REVISION	I R
SHEET	1 of 1