REVISION				
REV	DESCRIPTION	DRAWN	APPR	DATE
IR	Initial Registration	C.K.KIM	I.C.KIM	2016. 08. 17.

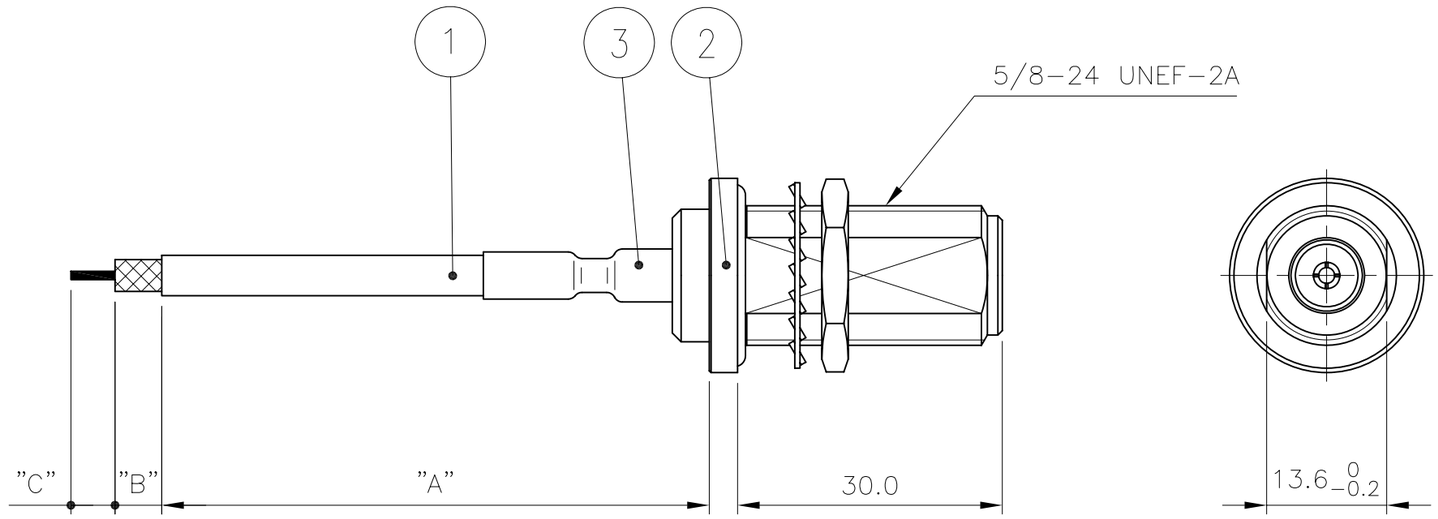

Notes

1. RoHS & Pb-FREE
2. CONNECTOR FINISHES
   2-1. N JB---▶ ▷BODY : Nickel Plating
   CONTACT : Gold Plating
   NUT,WASHER : Nickel Plating

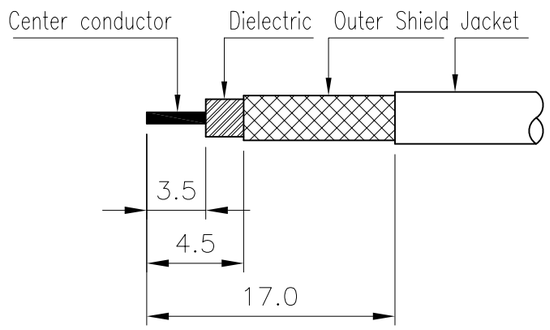

2번 CONN 탈피도

NO.	DESCRIPTION	Q'TY	VENDER	PART NO.	RAMARKS
3	SHRINK TUBE	1	LS TUBE	ATU00060-N/1	Ø6 20mm - BLACK
2	CONNECTOR	1	KJ COMTECH	CN02442-7/1	N50-JB
1	COAXIAL CABLE		EXPANTEL	ACA00040-N/1	141FJ(50Ω)- BLUE

CUSTOMER

CUSTOMER CODE

CABLE LENGTH TOLERANCE
0 ~ 1000mm : +5, -0
1000 ~ 2000mm : +10, -0
2000 ~ 3000mm : +15, -0
3000 ~ 4000mm : +20, -0
4000 ~ 5000mm : +25, -0
5000 ~ : +10%

DATE	2016. 08. 17.
APPROVED BY	I.C.KIM
CHECKED BY	H.J.LEE
DRAWN BY	C.K.KIM
CHECKED BY	
SCALE	N/S
UNIT	mm

KJ COMTECH
KJ COMTECH CO.,LTD.
RF & MICROWAVE TECHNOLOGY
Tel : 82-32-347-8015
Fax : 82-32-347-8017

TITLE: CABLE ASS'Y

A4

DWG NO.	CF00874-7/2
DETAIL NO.	
REVISION	I R
SHEET	1 of 1