WORK / ST										
ST(Old)										

REVISION

REV	DESCRIPTION	DATE

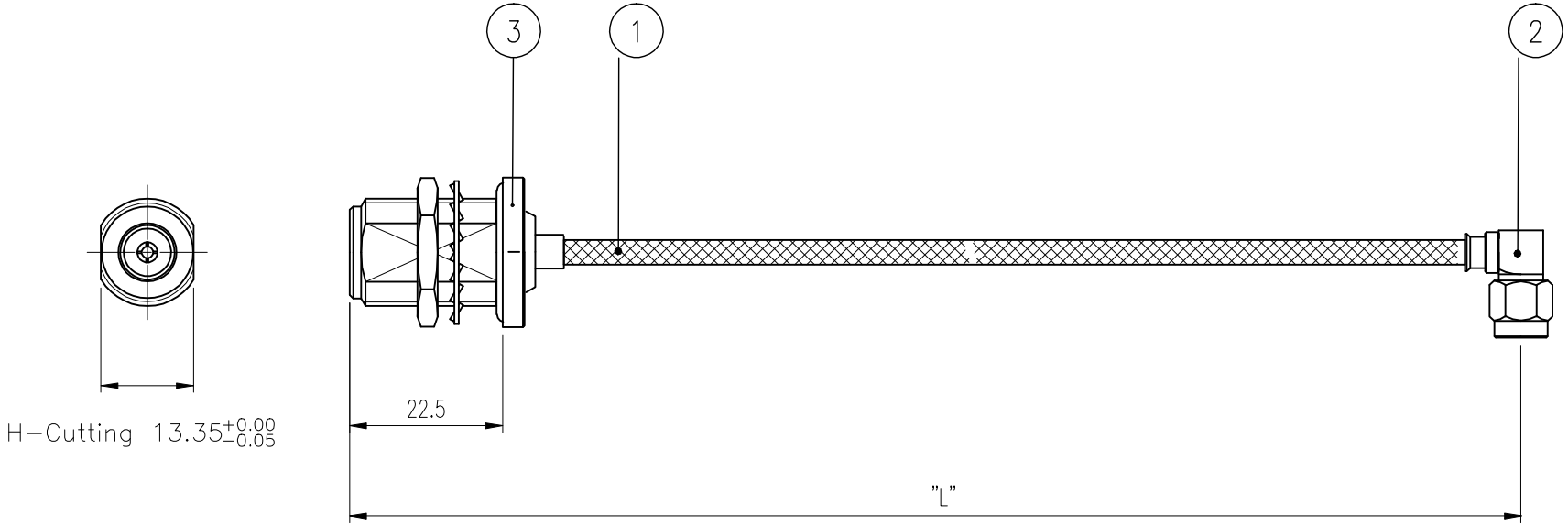

Notes

1. RoHS & Pb-FREE

NO.	DESCRIPTION	Q'TY	VENDER	PART NO.	REMARKS
3	CONNECTOR	1		CN02893-7/2	N(F)-BH
2	CONNECTOR	1		CN03286-7/3	SMA(M)-RA
1	COAXIAL CABLE		THERMAX NAF		141F

CUSTOMER	DATE 2008. 09. 25.		KJ COMTECH CO.,LTD. RF & MICROWAVE TECHNOLOGY Tel : 82-32-347-8015 Fax : 82-32-347-8017
	APPROVED BY		
CUSTOMER CODE	CHECKED BY		TITLE
CABLE LENGTH TOLERANCE 0 ~ 1000 : +5, −0 1000 ~ 2000 : +10, −0 2000 ~ 3000 : +15, −0 3000 ~ 4000 : +20, −0 4000 ~ 5000 : +25, −0 5000 ~ : +10%	DRAWN BY		
	SCALE N/S	UNIT mm	WEIGHT —
	A4	DWG NO. CF00395-7/1	
		DETAIL CODE.	