REVISION				
No.	DESCRIPTION	DRAWN	APPR	DATE
IR	Initial Registration	S.Y.EUN	I.C.KIM	2018. 11. 20.

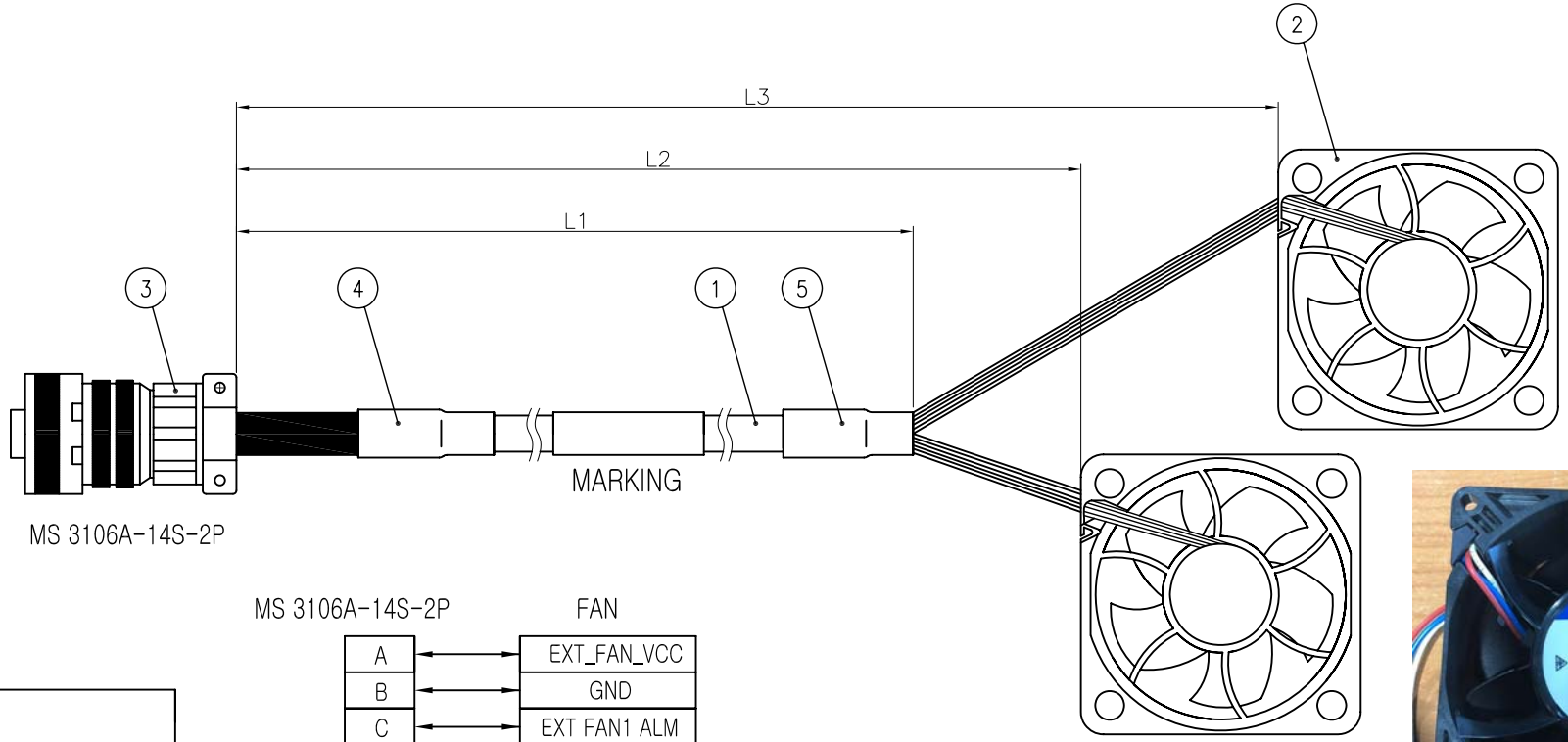

MS 3106A-14S-2P		FAN
A	↔	EXT_FAN_VCC
B	↔	GND
C	↔	EXT FAN1 ALM
D	↔	EXT FAN2 ALM

MARKING

☞ FAN 라벨 없는 쪽 뒷면에 NUT 체결할 것

제품사진

5	SHRINK TUBE	1	—	—	BLACK
4	BONDING TUBE	1	—	—	BLACK
3	CONNECTOR	1	—	—	MS 3106A-14S-2P
2	FAN	2	—	—	3254J/39HHU
1	GT TUBE		—	—	
NO.	DESCRIPTION	Q'TY	VENDER	PART NO.	RAMARKS

CUSTOMER

CUSTOMER CODE

CABLE LENGTH TOLERANCE

0 ~ 1000mm : +5, -0
1000 ~ 2000mm : +10, -0
2000 ~ 3000mm : +15, -0
3000 ~ 4000mm : +20, -0
4000 ~ 5000mm : +25, -0
5000 ~ : +10%

DATE	2018. 11. 20.
APPROVED BY	I.C.KIM
CHECKED BY	
DRAWN BY	S.Y.EUN
CHECKED BY	
SCALE	N/S
UNIT	mm

KJ COMTECH
KJ COMTECH CO.,LTD.
RF & MICROWAVE TECHNOLOGY
Tel : 82-32-347-8015
Fax : 82-32-347-8017

TITLE: CABLE ASS'Y

A3

DWG NO.	CD00272-7/1
DETAIL NO.	
REVISION	I R
SHEET	1 of 1