REVISION					
No.	DESCRIPTION	REV	DRAWN	APPR	DATE
IR	Initial Registration	IR	S.M.LEE	I.C.KIM	2015. 02. 09.
1	CABLE 공용화를 위한 GND CABLE AWG#14로 변경	1	C.K.KIM	I.C.KIM	2016. 12. 01.

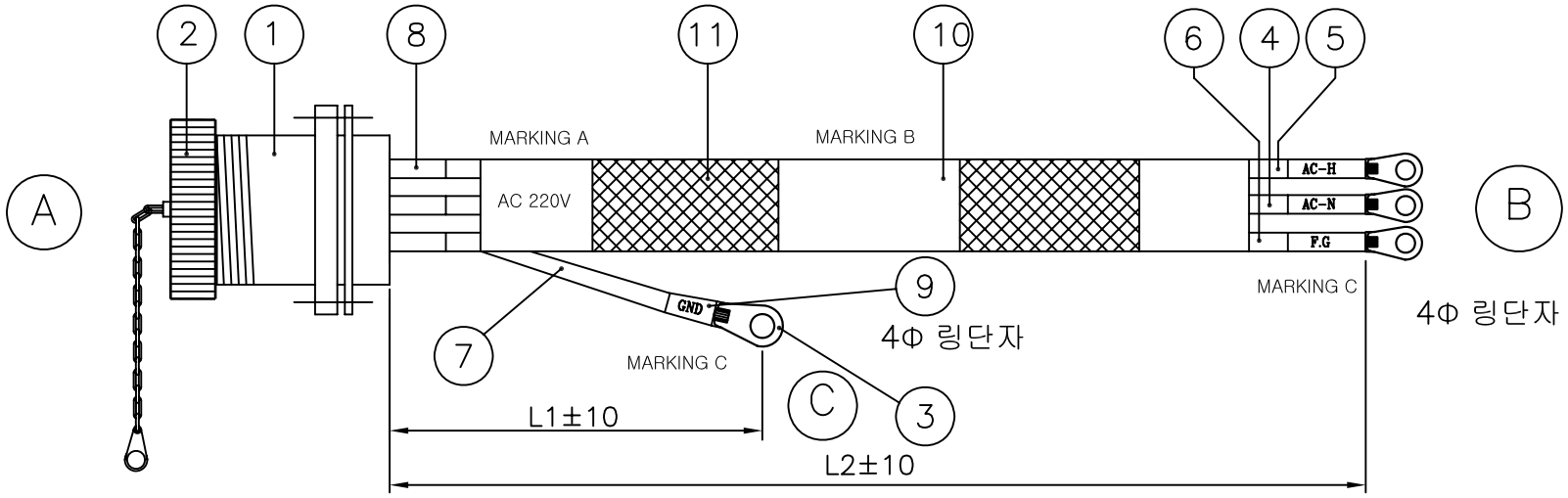

MS3102A-16-10P(M)

AC 220V		AC-H
		AC-N
		F.G
		GND
MARKING A	MARKING B	MARKING C

A	AC-H	A	RED (AWG#14)
	AC-N	B	BLACK(AWG#14)
	F.G	C	GREEN(AWG#14)
			GREEN(AWG#14)
			~~GREEN(AWG#18)~~

B

C

NO.	DESCRIPTION	Q'TY	VENDER	PART NO.	RAMARKS
11	EXPANDER	1	1/4"	ATU00359-N/1	710mm
10	MARKING & SHRINK TUBE	3	LS TUBE	ATU00228-N/1	Ø12 White
9	MARKING TUBE	4	LS TUBE	ATU00216-N/1	Ø6 White
8	SHRINK TUBE	3	LS TUBE	ATU00056-N/1	Ø4 Black
7	CABLE	1	AWG#14 UL1015 ~~AWG#18 UL1015~~	ACA00236-N/1 ~~ACA00390-N/1~~	100mm (GREEN)
6	CABLE	1	AWG#14 UL1015	ACA00236-N/1	710mm (GREEN)
5	CABLE	1	AWG#14 UL1015	ACA00327-N/1	710mm (RED)
4	CABLE	1	AWG#14 UL1015	ACA00235-N/1	710mm (BLACK)
3	LUG	4	KET	DLU00003-N/1	Ø4 LUG단자
2	DUST CAP	1	YONGJIN	DCN00110-N/1	MS25043-16D
1	CONNECTOR	1	YONGJIN	DCN00099-N/1	MS3102A-16-10P(M)

CUSTOMER

CUSTOMER CODE

CABLE LENGTH TOLERANCE
0 ~ 1000mm : +5, -0
1000 ~ 2000mm : +10, -0
2000 ~ 3000mm : +15, -0
3000 ~ 4000mm : +20, -0
4000 ~ 5000mm : +25, -0
5000 ~ : +10%

DATE	2016. 12. 01.
APPROVED BY	I.C.KIM
CHECKED BY	
DRAWN BY	C.K.KIM
CHECKED BY	
SCALE N/S	UNIT mm

KJ COMTECH
KJ COMTECH CO.,LTD.
RF & MICROWAVE TECHNOLOGY
Tel : 82-32-347-8015
Fax : 82-32-347-8017

TITLE
AC220 INPUT POWER CABLE

A4

DWG NO.	CD00208-7/1
DETAIL NO.	
REVISION 1	SHEET 1 of 1