REVISION					
No.	DESCRIPTION	REV	DRAWN	APPR	DATE
IR	Initial Registration	IR	S.M.LEE	I.C.KIM	2015. 03. 09.
1	고객사 요청으로 마킹튜브 추가	1	S.M.LEE	I.C.KIM	2015. 05. 14.

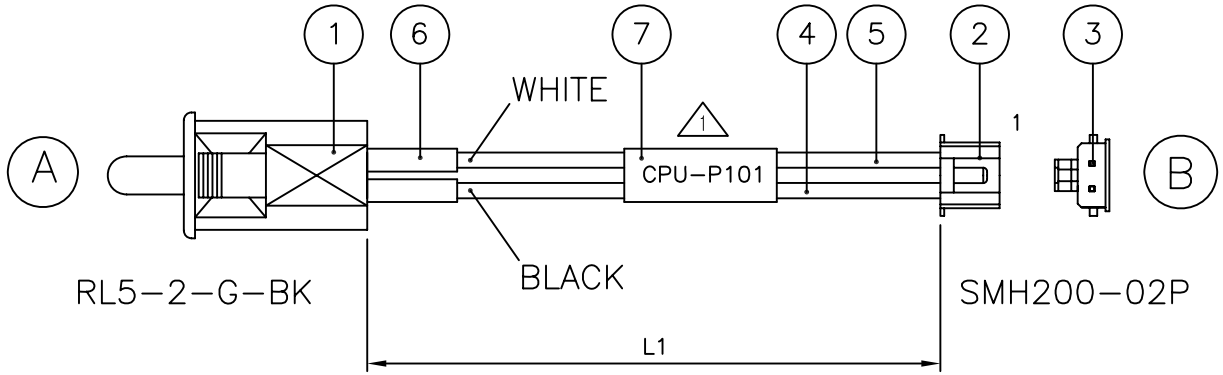

CPU-P101

MARKING

A SWITCH ⟷ 1 WHITE
SWITCH ⟷ 2 BLACK B

NO.	DESCRIPTION	Q'TY	SPEC	PART NO.	RAMARKS
7	MARKING TUBE	1	LS TUBE	ATU00214-N/1	⌀5 White
6	SHRINK TUBE	2	LS TUBE	ATU00058-N/1	⌀5 Black
5	CABLE	1	AWG#26 UL1007	ACA00229-N/1	40mm(Brown)
4	CABLE	1	AWG#26 UL1007	ACA00223-N/1	40mm(Black)
3	TERMINAL PIN	2	YEONHO	DCN00126-N/1	YST-200
2	CONNECTOR	1	YEONHO	DCN00170-N/1	SMH200-02P
1	CONNECTOR	1	RL5-2-G-BK	DCN00189-N/1	RLEIL PUSH SWITCH

CUSTOMER

CUSTOMER CODE

CABLE LENGTH TOLERANCE
0 ~ 1000mm : +5, -0
1000 ~ 2000mm : +10, -0
2000 ~ 3000mm : +15, -0
3000 ~ 4000mm : +20, -0
4000 ~ 5000mm : +25, -0
5000 ~ : +10%

DATE	2015. 05. 14.
APPROVED BY	I.C.KIM
CHECKED BY	
DRAWN BY	S.M.LEE
CHECKED BY	
SCALE	N/S
UNIT	mm

KJ COMTECH
KJ COMTECH CO.,LTD.
RF & MICROWAVE TECHNOLOGY
Tel : 82-32-347-8015
Fax : 82-32-347-8017

TITLE DOOR-SW CABLE

A4

DWG NO.	CD00139-7/1
DETAIL NO.	
REVISION	1
SHEET	1 of 1