REVISION				
REV	DESCRIPTION	DRAWN	APPR	DATE
1	Initial Registration	T.J.KIM	J.H.YOUN	2016.02.23.
2	LC 버전	T.J.KIM	J.H.YOUN	2016.03.21.
3	특성 개선 Rev.	T.J.KIM	J.H.YOUN	2016.04.20.
4	PIMD 특성 개선 구조변경	T.J.KIM	J.H.YOUN	2016.06.17.
5	PIMD 특성 개선 구조변경 2차	T.J.KIM	J.H.YOUN	2016.08.16.

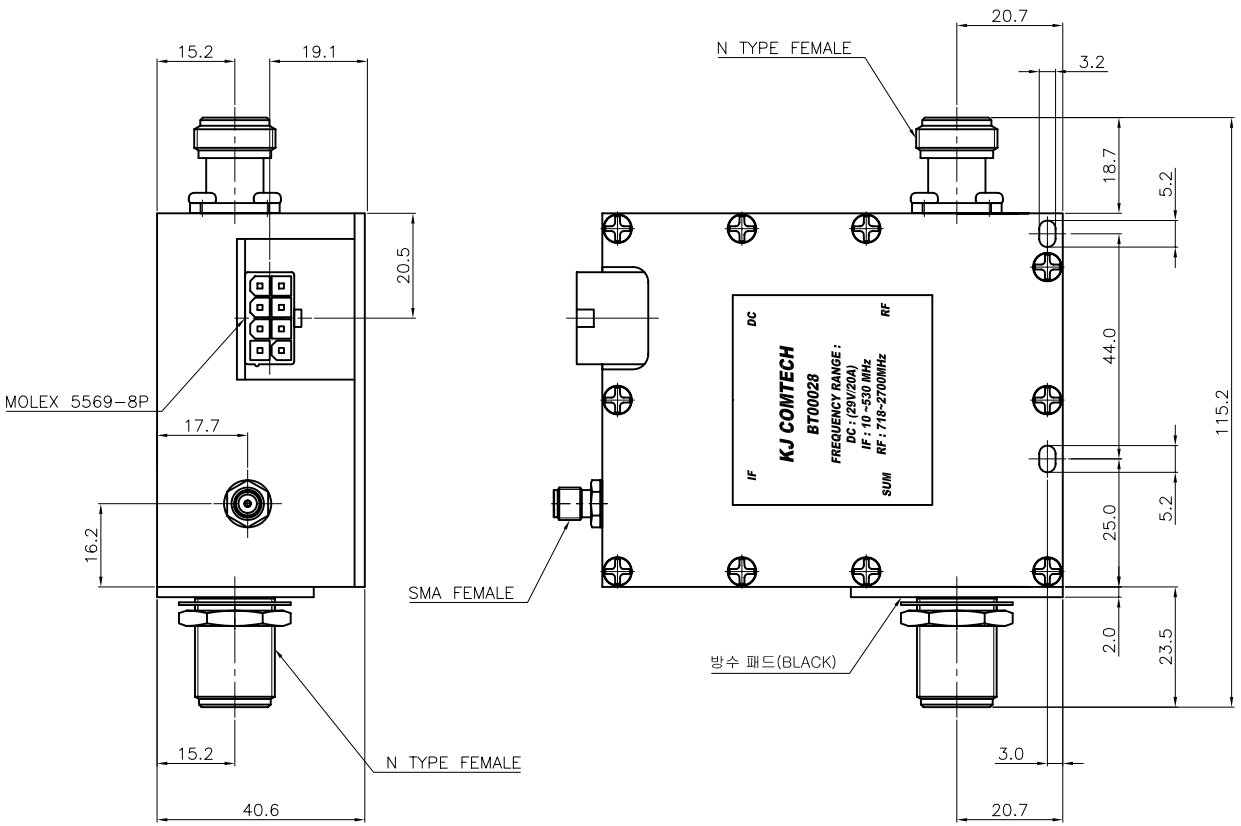

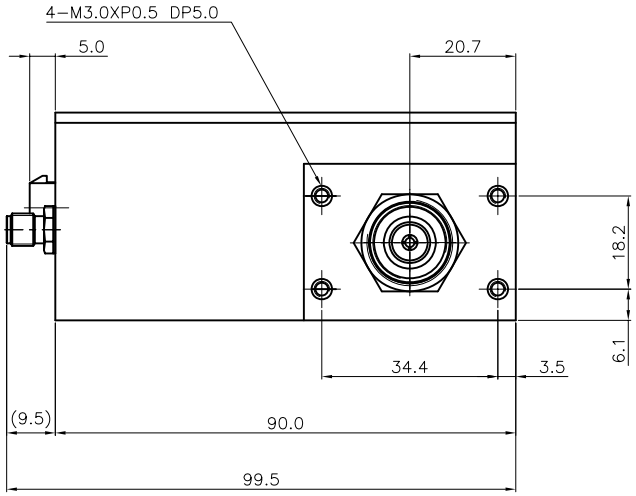

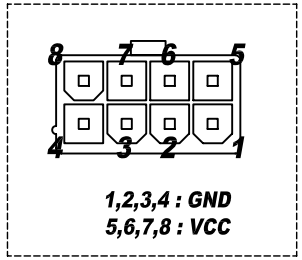

MOLEX 5569 PIN MAP

* ELECTRICAL SPECIFICATIONS

Parameter	Unit		Specifications		
Frequency Range	MHz		IF PORT	BIAS PORT	RF PORT
			10~530	DC	718~2700
VSWR		Max.	2.5 : 1	-	1.3 : 1
Insertion Loss	dB	Max.	3.5	-	1.5
PIMD	dBc		-		-150(CDMA,WCDMA@43dBm 2Tone)
Input Power	W	Max.	1		100
Impedance	Ω		50		
Voltage	V		-	29	-
Current	A	Max.	-	20	-

* MECHANICAL SPECIFICATIONS
HOUSING : A6061 (White Chromate)
CONNECTORS : MBsBD (SUCO Plate)
CONNECTORS PINS : Beryllium Copper (Silver Plate)
INSULATORS : TEFLON

TOLERANCE	Decimal ±0.3	DATE 2016. 08. 16.	KJ COMTECH KJ COMTECH CO.,LTD.	RF & MICROWAVE TECHNOLOGY Tel : 82-32-347-8015 Fax : 82-32-347-8017
	Angle ±1°	APPROVED BY J.H.YOUN		
MATERIAL A6061		CHECKED BY S.L.SON	TITLE Bias Tee	
		DRAWN BY T.J.KIM	A3	DWG NO. BT00028-7/5
FINISH White Chromate		SCALE 1/1	UNIT mm	REVISION 5 SHEET 1 of 1