REVISION				
REV	DESCRIPTION	DRAWN	APPR	DATE
IR	Initial Registration	I.C.KIM	J.H.YOUN	2011.09.08.

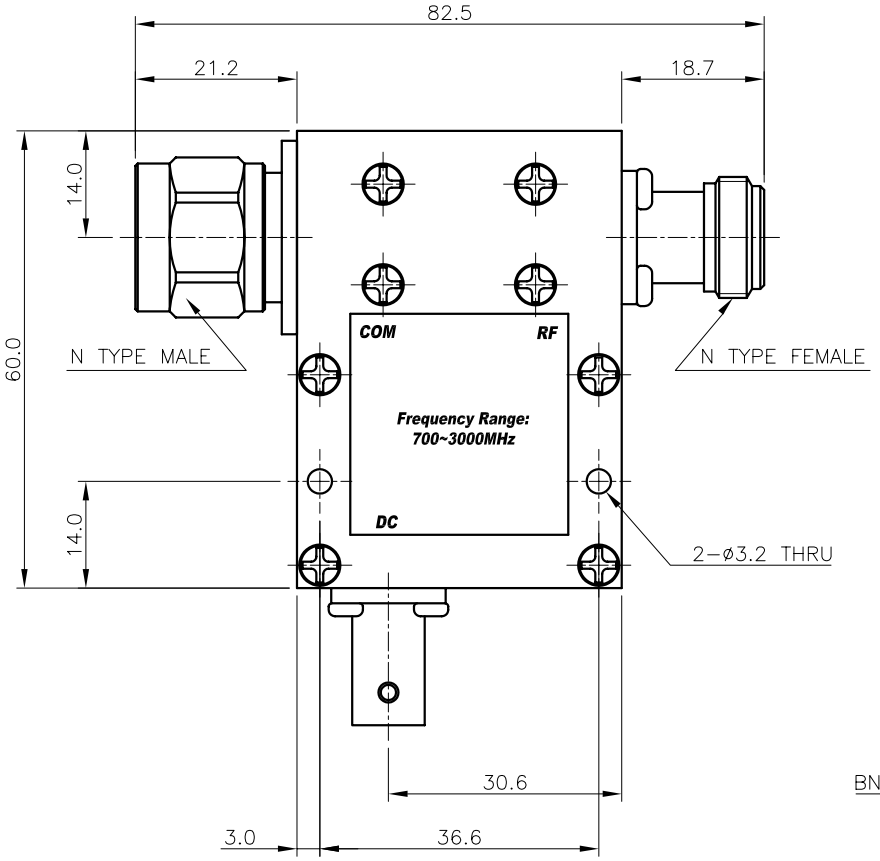

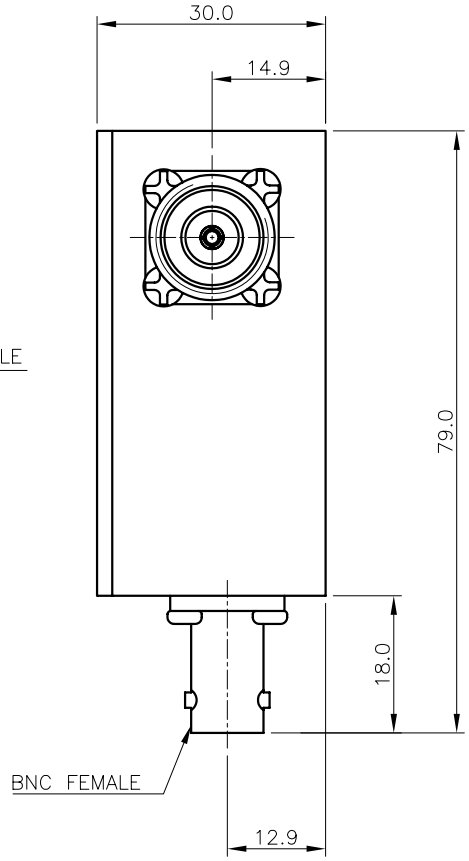

* ELECTRICAL SPECIFICATIONS
Frequency Range : RF Path 700.0 ~ 3000.0MHz
Bias Path DC~25MHz
Insertion Loss (Max.) : 0.4dB (RF Path / Bias Path)
Return loss(Min.) : 18dB @ Combined Port
DC Voltage : 30.0V
DC Current (Max.) : 3.0A
RF Power Rating (Max.) : 120.0W
RF Port/Bias Port Isolation(Min.) : 30dB

* MECHANICAL SPECIFICATIONS
HOUSING : A6061 T6 (White Chromate)
CONNECTORS :
N type Connector MBsBD (SUCO Plate)
BNC Connector MBsBD (Ni Plate)
CONNECTORS PINS :
N type Connector Beryllium Copper (Silver Plate)
BNC Connector Beryllium Copper (Gold Plate)
INSULATORS : TEFLON

TOLERANCE	Decimal ±0.3	DATE 2011. 09. 08.	KJ COMTECH CO.,LTD.	RF & MICROWAVE TECHNOLOGY Tel : 82-32-347-8015 Fax : 82-32-347-8017
	Angle ±1°	APPROVED BY J.H.YOUN		
		CHECKED BY I.C.KIM	TITLE BIAS T	
MATERIAL A6061 T6		DRAWN BY J.H.YOUN		
FINISH White Chromate		SCALE 1/1 / UNIT mm	A4	DWG NO. BT00020-7/1
				REVISION I R / SHEET 1 of 1