REVISION				
REV	DESCRIPTION	DRAWN	APPR	DATE
IR	Initial Registration	S.Y.EUN	I.C.KIM	2019.10.29.

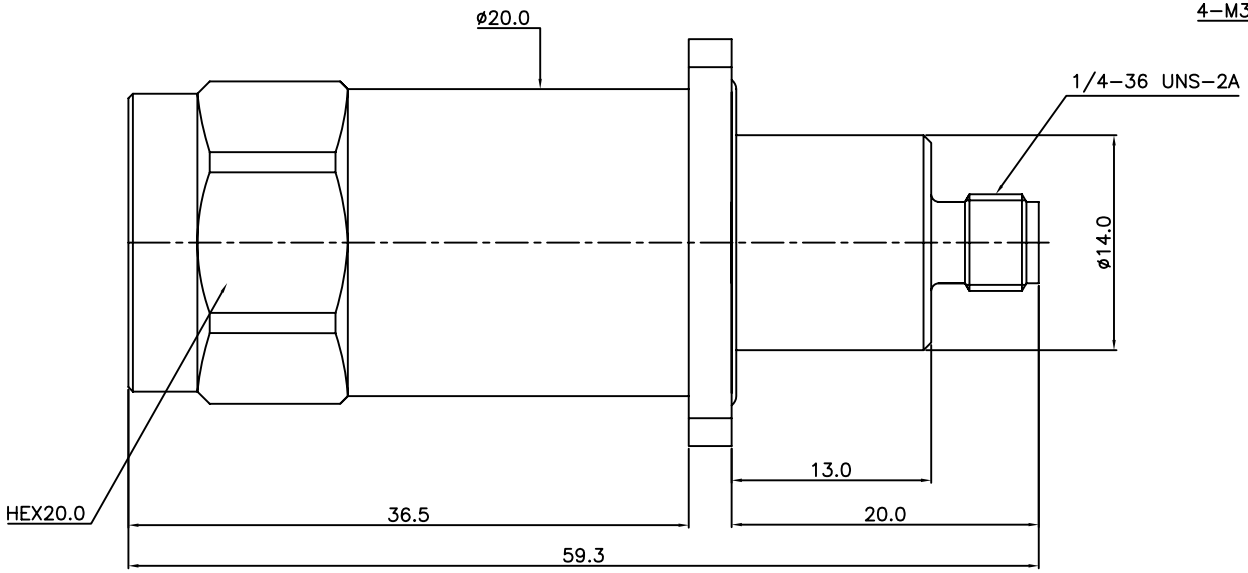

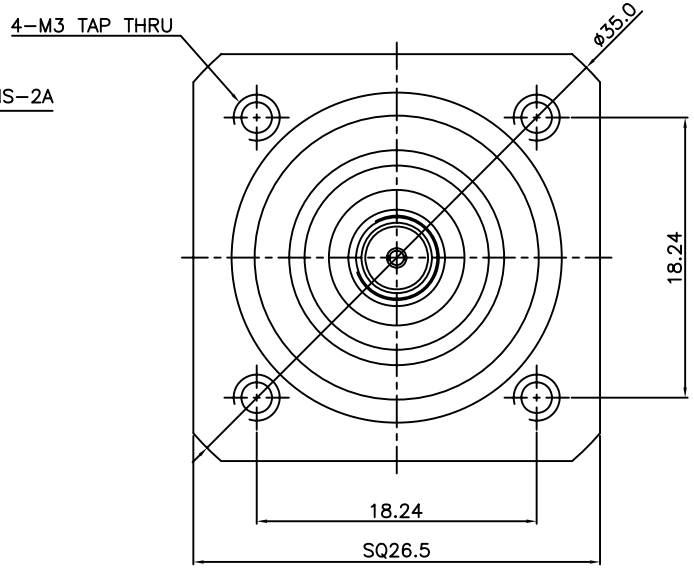

NO.	DESCRIPTION	Q'TY	MATERIAL	PLATING	CODE
15	LABEL	1	은무데드롱		DLA00795-8/1
14	PAD	1	절연테이프		DIT00010-N/1
13	CIRCLE PLATE	1	A5052	Silver Plate	DCA00017-5/1
12	JOINT PIN (C)	1	MBsBD	Gold Plate	DCT02562-5/1
11	JOINT PIN (B)	1	MBsBD	Gold Plate	DCT02563-5/1
10	JOINT PIN (A)	1	MBsBD	Gold Plate	DCT02561-5/1
9	INSULATOR	1	TEFLON		DIN02012-N/2
8	INSULATOR	1	TEFLON		DIN02011-N/1
7	GASKET	1	SILICONE RUB	RED	DGK00013-N/1
6	GASKET	1	SILICONE RUB	RED	DGK00050-N/1
5	GASKET	1	SILICONE RUB	RED	DGK00045-N/1
4	CONTACT (B)	1	BeCu C17300	Gold Plate	DCT04082-5/1
3	CONTACT (A)	1	MBsBD C3604BD-F	Gold Plate	DCT04081-5/1
2	BODY(B)	1	MBsBD C3604BD-F	Nickel Plate	DBD04571-5/1
1	BODY(A)	1	MBsBD C3604BD-F	Nickel Plate	DBD04570-5/1

* ELECTRICAL SPECIFICATIONS
Frequency Range : 5.8GHz~5.9GHz
Insertion Loss (Min.) : -0.3dB
V.S.W.R (Max.) : 1.25
Impedance : 50Ω
방수 : IP67
Impulse Discharge Voltage : 6kV(1.2/50㎲) / 3kA (8/20㎲)

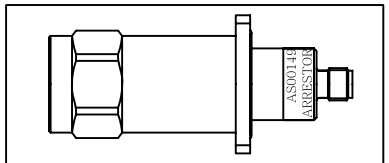

LABEL 부착 외관도

TOLERANCE	Decimal ±0.1	DATE	2019. 10. 29.
	Angle ±1°	APPROVED BY	I.C.KIM
MATERIAL		CHECKED BY	
		DRAWN BY	S.Y.EUN
FINISH		SCALE 3/1	UNIT mm

KJ COMTECH
KJ COMTECH CO.,LTD.
RF & MICROWAVE TECHNOLOGY
Tel : 82-32-347-8015
Fax : 82-32-347-8017

TITLE NP SMAJ(1/4λ) ARRESTOR
5800~5900 MHz

A3 DWG NO. AS00149-7/1
REVISION I R
SHEET 1 of 1