REVISION				
REV	DESCRIPTION	DRAWN	APPR	DATE
IR	Initial Registration	I.C.KIM		2016.12.01.
1	대체 제품 적용으로 인한 가스켓 PAD 추가	S.Y.EUN	I.C.KIM	2021.02.26.

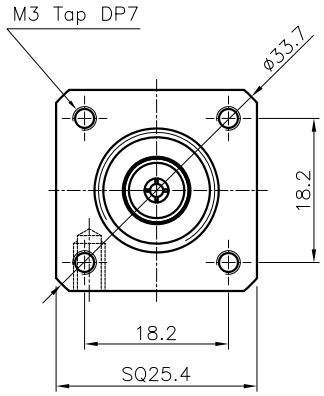

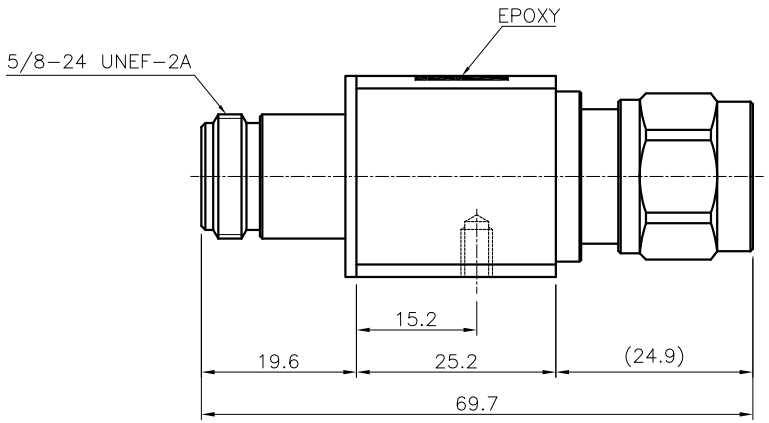

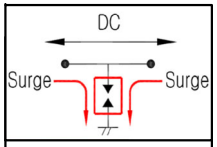

회로도

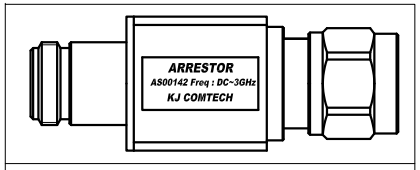

LABEL 부착 위치

GAS TUBE 규격

Item	DC Breakdown Voltage(V) <NOMINAL>	Impulse Breakdown Voltage(V) <MIN>	Insulation Resistance (MΩ) <MIN>	Capacitance(pF) <NOMINAL>	Surge Life(Times) <MIN>
	100 V / s	(100V/㎲)		1MHz 1pF	10/1000 ㎲ 200A
2P-23	230±20%	700	10000	1.0	50

* Standards : IEC 169-16, MIL-STD-348B , CECC 22210
* ELECTRICAL SPECIFICATIONS
Frequency Range : DC~3,000 MHz
Insertion Loss (Max.) : 0.5 dB
V.S.W.R (Max.) : 1.20 : 1
Impedance : 50Ω

1	Insulation Resistance	DC 100V	1GΩ Min
2	DC Breakdown Voltage	2KV/s	250V±15% (Initial) 250V±25% (After Life Test)
3	Inpulse Breakdown Voltage	100V/㎲	500V Max (Initial) 700V Max (After Life Test)
4	Capacitance	1KHz	3pF Max
5	Inpulse Discharge Current I (8/20㎲ 5kA)	5 operations	Item No. 1~3
6	Inpulse Discharge Current II (10/1000㎲ 200A)	50 operations	Item No. 1~3
7	Alternating Discharge Current (5Arms 1s at AC 60Hz)	5 operations	Item No. 1~3
8	RF Power rating	≤20 W	
9	Arc(residual) voltage	≤25 V	
10	Surge current	6kV(1.2/50㎲) / 3kA (8/20㎲)	

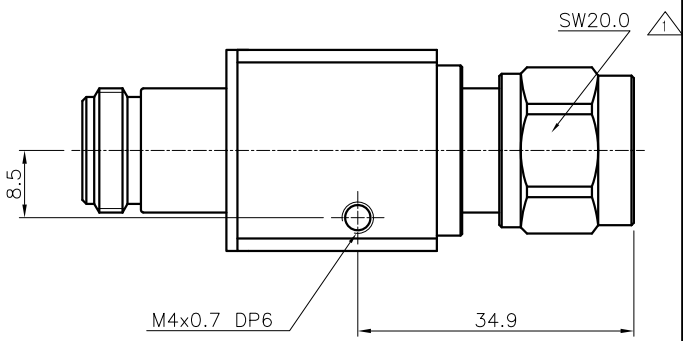

NO.	DESCRIPTION	Q'TY	MATERIAL	PLATING	CODE
13	GASKET	1	SILICONE RUB	——	DGK00079-N/1
12	LABEL	1	은우데드롱	——	DLA00696-8/1
11	GAS TUBE	1	——	——	DGT00001-N/1 (2P-23)
10	SPRING RING	1	PBR	Nickel Plate	DSR00020-5/1
9	COVER	1	MBsBD C3604BD-F	Nickel Plate	DCS00010-5/1
8	CAP	1	MBsBD C3604BD-F	Nickel Plate	DCU00063-5/3
7	INSULATOR	2	TEFLON		DIN02071-N/1
6	GASKET	1	SILICONE RUB	RED	DGK00042-N/2
5	GASKET	1	SILICONE RUB	RED	DGK00013-N/1
4	CONTACT (B)	1	BeCu C17300	Gold Plate	DCT00693-5/2
3	CONTACT (A)	1	MBsBD C3604BD-F	Gold Plate	DCT03786-5/1
2	BODY(B)	1	MBsBD C3604BD-F	Nickel Plate	DBD04259-5/1
1	BODY(A)	1	MBsBD C3604BD-F	Nickel Plate	DBD04258-5/1

Notes

1. RoHS & Pb-FREE
2. CONNECTOR FINISHES
   2-1. BODY : BRASS / Nickel Plating
   CONTACT : BRASS , Beryllium copper / Gold Plating
   CAP / COVER : BRASS / Nickel Plating

TOLERANCE	Decimal ±0.3	DATE	2021. 02. 26.
	Angle ±1°	APPROVED BY	I.C.KIM
		CHECKED BY	
MATERIAL		DRAWN BY	S.Y.EUN
FINISH		SCALE 1.5/1	UNIT mm

KJ COMTECH
KJ COMTECH CO.,LTD.
RF & MICROWAVE TECHNOLOGY
Tel : 82-32-347-8015
Fax : 82-32-347-8017

TITLE: ARRESTER NJ NP (Gas) 50ohm

A3 | DWG NO. AS00142-7/1 | REVISION 1 | SHEET 1 of 1